Comparative assessment of short term volume change on sandbars using digital softcopy stereo-photogrammetry versus two-dimensional planimetric photogrammetry

Final Report

Cooperative Agreement #1425-98-FC-40-22630

By

Mark Manone

Department of Geology
Northern Arizona University
Box 4099
Flagstaff, AZ 86011

Contents

Abstract……..1

1.0 Introduction……..……2

2.0 Objectives…….6

3.0 Hypothesis……..……..7

4.0 Methods……..……..7
4.1 Phase One Studies…….……8
4.1.1 Sechrist Dormitory 2D Study…….……...8
4.1.2 Sechrist Dormitory 3D Study……9
4.1.3 Agassiz Run Study…….…..10
4.1.4 Badger Camp Pilot Study……..…11
4.2 Phase Two Studies…….….11
4.2.1 Study Sites……11
4.2.2 Camera Instrumentation……...……13
4.2.3 Photogrammetric Control……..…...…14
4.2.4 Image Processing……...…...…14
4.2.5 Two-Dimensional Analysis – Planimetric Rectification……..……15
4.2.6 Three-Dimensional Analysis – Stereo-Photogrammetry…….……16
4.2.7 Image and Ground Space…….……17
4.2.8 Surface Generation……...……18

5.0 Results…….……20
5.1 Phase 1 Results…….…...…20
5.1.1 Sechrist Dormitory 2D……20
5.1.2 Sechrist Dormitory 3D……22
5.1.3 Agassiz Run Study Results…….……23
5.1.4 Phase 1 Discussion…….……..…24

5.2 Phase 2 Results...……25
5.2.1 Surface Comparison……26
5.2.2 Average Surface Elevation - Point to Point……28
5.2.3 Phase 2 Discussion …….……29
.

6.0 Summary and Conclusions……31

Literature Cited…….……..33

Figures

Abstract

Monitoring sediment resources in the Colorado River through Grand Canyon is currently of great interest to scientists and resource managers. Historically, sediment deposits in eddies and along the margins of the Colorado River have been studied using conventional surveying techniques. Oblique photogrammetry has also been utilized as an effective way to determine area change, as well as being less intrusive and time consuming. Following the 1996 Controlled Flood, it was observed that sandbars were largely aggraded in volume and changed very little in area; however, they were eroding rapidly, on the scale of days or hours. Daily photography can be acquired at the time scale of weeks, days or hours and can be collected continuously with minimal impact. In this report a method was tested to determine the feasibility to use inexpensive off – the – shelf cameras to determine two-dimensional and three dimensional changes on sandbars in Grand Canyon. The results suggest that two dimensional rectification of imagery is reliable with measured errors ranging from 1% - 11%. Attempts to model sandbars three dimensionally using oblique photogrammetry were unsuccessful and not reliable. Gross errors are reported in horizontal position as well as vertical and a relative comparison of generated surfaces to surveyed surfaces had errors ranging from 8% to 20%. Coinciding grids were created for standard survey surfaces and photogrammetric surfaces to be used for point to point comparison. Large errors were observed at all sample sites ranging from averages of 1.5 m – 2 .0 m with a RMSE ranging from 2.15 m – 3.0 m.

1.0 Introduction

Monitoring sediment resources in the Colorado River downstream from Glen Canyon Dam has been of great interest to scientists and resource managers since scientific studies since the Bureau of Reclamation Upwind Program in 1983 (United States Department of Interior, 1995). Stationary, land based photography provides an effective, minimally invasive tool for assessing short term, large-scale changes on sandbars in Grand Canyon. In this report a method is presented which tests a stereo-photogrammetric technique to quantify terrestrial volume and geomorphic change on a daily scale. Daily photography using stationary cameras could be an effective technique to analyze short-term geomorphic change in sandbars, as well as pre-dam terraces which are not routinely surveyed and that may contain sensitive archaeologic sites and cultural artifacts.

Historically, sediment deposits in eddies and along the margins of the Colorado River have been studied using conventional surveying techniques (Schmidt and Graf, 1990, Kaplinski et al., 1995; Hazel et al., 1997). Oblique photogrammetry has also been utilized as an effective way to determine area change (Dexter et al., 1994) as well as, being less intrusive and time consuming. Photogrammetric techniques utilizing daily photography have been used to analyze and monitor sand bar area change in Grand Canyon, beginning in August 1990. Cluer et al. (1992) used images taken during the low flow of a typical daily hydropower fluctuation and measured morphologic shoreline changes with the aid of a calibrated loupe. Although this technique was successful, subsequent monitoring has shown that changes in sandbar morphology were more precisely quantified with volume calculations derived from landform models using dense total-station surveys (Kaplinski et al., 1995; Hazel et al., 1999). However, perceptions of

invasive onsite visitation and logistical constraints limit the frequency with which these conventional total station surveys can be completed.

Dexter et al. (1994) showed that large-scale erosion of Grand Canyon sandbars can occur within a period of hours to days and thus go undetected by the annual or semi-annual time step of total station surveys. As a result, a technique was developed that produced relatively accurate two-dimensional measurements (+/- 0.5 m^2) from images (Manone et al., 1994).

Results from the 1996 Beach/Habitat Building Flow showed a system-wide high elevation (above 566 m^3/s) sandbar response of increases in volume and area of 164% and 67%, respectively (Hazel et al., 1999). These values indicate that the vertical component, and three-dimensional analysis, is key in assessing sandbar related response. The critical nature of three-dimensional measurements in sandbar monitoring is also supported by Schmidt et al. (1995) who suggest that the average elevation of a sandbar can considerably increase or decrease and the exposed area does not significantly change.

Therefore, an inexpensive technique to look at short term, large-scale volume change is important to evaluate rapid sediment erosion in the case of changing dam releases for example, another BHBF). Recent advancements involving stereo photographic analysis using non-metric cameras have made it possible to attempt to generate accurate assessments of volume change using stereo pairs derived from high oblique, convergent images (Stojic et al., 1999, Lane et al., 1996). Daily geomorphic change in sandbars using volumetric comparison can potentially be determined using this methodology. This kind of information may be extremely useful to resource and dam managers closely monitoring patterns of sediment dynamics in response to changing flow releases where short temporal time scales are important. Archaeological sites which are sensitive to visitation and human impact could also be an optimal use for monitoring

using stationary cameras.

A comparative assessment of the proposed three-dimensional technique versus the known and proven two-dimensional technique is important to determine the usability of the techniques. This comparison can also be used to evaluate advances in photogrammetry techniques that could be used to accomplish the objectives of the previous technique. In many cases a two-dimensional approach may be desirable when the interest is solely on area change or bank retreat. Two-dimensional analysis will most likely prove to be less time consuming and less technically involved. Three-dimensional analysis will be able assess everything two-dimensional can and result in several other options, such as Digital Terrain Model (DTM) generation or volume change. Quality assurance and quality control is accomplished by comparing the two photogrammetric techniques to accurate total station surveying data. This comparison is essential to evaluate errors incurred with each during collection and processing.

Any evaluation of alternative monitoring techniques should also consider the frequency and length of the monitoring period. Although two-dimensional change may be all that is needed at the time the photos are collected, it may be beneficial to collect and analyze all data in three-dimensions for a flexible historical and archival record.

O'Brien et al. (2000) performed the first study using existing Grand Canyon stereo imagery for photogrammetric modeling. They used Erdas Orthomax software, which preceded Erdas Orthobase, to generate three-dimensional surfaces from newly acquired and historic aerial photography and compared the results to Northern Arizona University (NAU) topographic survey data from similar dates. O'Brien et al. (2000) found agreement between the stereo-photogrammetry and the surveyed surfaces to be relatively accurate with a vertical error of 0.25-0.30 m. They concluded that the level of accuracy achieved in the study was adequate for

measuring large-scale changes over long reaches, or for quantifying sandbar topography in historical aerial photographs for which no other means of measurement are possible.

In 2000, the Grand Canyon Monitoring and Research Center (GCMRC) contracted for aerial stereo photographic acquisition and photogrammetric processing to achieve accurate 0.25 m contours. The contours were generated with acceptable accuracy for bare ground; however, contours had limited accuracy under vegetation canopy or obscured views (Davis et al., 2002). As part of the same study low and moderate density Light Detection and Ranging (LIDAR) data was captured for comparison of channel margin sediment deposit and sandbar change. LIDAR is an active remote sensing system that uses pulses of light to illuminate the terrain. LIDAR data collection involves mounting an airborne laser scanning system onboard an airplane along with a Global Positioning System (GPS) receiver and an Inertia Measurement Unit (IMU) to closely monitor location. By accurately monitoring the round trip travel time of the laser pulse from the airplane to the ground and back, an accurate spot elevation can be calculated. Davis, et al. 2002 found the two LIDAR datasets to be unreliable (vertical error of .15m to .79m) for the resolution and vertical accuracy needed to quantify useful data for bare ground surfaces and was unusable (vertical error of .13m to1.44m) for terrain under canopy or obscured by vegetation.

Previous studies have used oblique photogrammetry to develop protocols and derive appropriate data for fluvial research.. Lo and Wong (1973) used 35mm cameras to examine the development of rills and gullies on a small section of weathered granite in Hong Kong. Collins and Moon (1979) measured stream bank erosion photogrammetrically. This technique was further developed by Welch and Jordan (1983) who used non-metric 35mm imagery to measure cross-sectional profiles and three-dimensional terrain models to represent change occurring in a dynamic stream meander bed. More recently, Lane et al. (1994) combined analytical

photogrammetry with standard survey methods to quantify change occurring in a rapidly evolving braided pro-glacial channel in the Alps. A Wild P32 camera was used to acquire high-oblique terrestrial images. Their studies reported RMS errors of less than 2mm demonstrating just how improved topographic monitoring photogrammetry could assist fluvial research (Lane et al., 1996.).

2.0 Objectives

The purpose of this research was to assess the accuracy of terrestrial based oblique photogrammetry as a monitoring tool in Grand Canyon using non-metric cameras. Non-metric cameras are not calibrated like standard mapping cameras used in traditional photogrammetry, which are calibrated often and are accompanied by a calibration report. The calibration allows a photogrammetrist to accurately know and account for all possible distortions; non-metric cameras need to be calibrated using components of their interior orientation to derive a "self calibration". This technique is very difficult and often inaccurate with "off – the - shelf" cameras.

The initial phase or this research consisted of on-site (on or around Northern Arizona University, Flagstaff, Arizona) test scenarios to determine optimal positioning and distancing of cameras to produce the most accurate stereo-photogrammetric data. These tests consisted of two-dimensional to three-dimensional comparisons, angular optimization in both offset and elevation angles and overlap considerations of image blocks.

The objectives of the second phase of research was to instrument three sites along the Colorado River between Lees Ferry and Phantom Ranch (Figure 1) using what was learned from

Phase 1 for optimal placement. Image data were captured periodically at the three sites and photogrammetric techniques developed in phase one would be applied. To assess the accuracy of the technique, stereo-photogrammetry was volumetrically compared to ground surveys performed on the same day as the images were acquired. Ideally, if the results are acceptable, then imagery collected on subsequent days could be used to detect short term, large scale change. Phase two studies began in June 1999 with the instrumentation of three long-term study sites in Grand Canyon, which consisted of Badger Camp (RM8.0), 22 Mile Camp (RM22.1) and Grapevine Camp (RM81.2) cameras were configured and instrumented for stereo coverage (Figure 1).

3.0 Hypotheses

Ho: 2D and 3D analyses of sediment deposits using terrestrial photogrammetry are of equal lesser value than the existing technique of two-dimensional analysis by conventional total station surveying.

Ha: 2D and 3D analyses of sediment deposits using terrestrial photogrammetry are of greater value than the existing technique of conventional total station surveying.

Ha: 2D and 3D analyses of sediment deposits using terrestrial photogrammetry are of greater value than the existing technique of using conventional total station surveying and is determined a feasible and cost efficient way to monitor sediment deposits.

Ha: Average surface elevation calculated from digital terrain model (DTM) extraction using terrestrial photogrammetry data is representative of three-dimensional geomorphic change of sediment deposits.

4.0 Methods

4.1 Phase One Studies

In the photogrammetric analyses, a new softcopy photogrammetry package called Orthobase (produced by the ERDAS Corporation) was used. Orthobase was designed with an internal self-calibrating bundle adjustment, which can estimate interior orientation parameters of a non-metric camera with a minimal input of pixel size. This feature was determined to be superior to the package that was originally used, Orthomax, for the non-metric terrestrial applications attempted. Orthobase also allows for predominant orientation along the Y axis, rather than the Z axis, which is well suited for terrestrial oblique photogrammetry work (ERDAS, 1999). Therefore, upon evaluation of the software a switch was made to Orthobase for the duration of the study. Orthobase is bundled with a Stereo Analyst package, which allows for efficient and precise stereoscopic editing.

Phase 1 and Phase 2 studies were performed at a total of five sites. Phase one study sites were on the Northern Arizona University campus and at the Arizona Snowbowl for convenience of initial testing. Optimal geometry based on Phase one results were used for Phase two camera locations. However, often the geometry of the canyon and the limited number of places where one can actually mount a camera, dictated what the final camera placement would be.

4.1.1 Sechrist Dormitory (NAU) 2D study

An independent test to determine the accuracy of polygon area calculations using two-dimensional image rectification was carried out on the Northern Arizona University campus.

This was a repeat of work previously done by Bohnenstiehl (1997) with an additonal second camera for stereoscopic convergence. The eight-story Sechrist dormitory was used to simulate nine levels of camera placements above and opposite a beach. Three designated polygons with areas of 160.57m^2, 183.45m^2, and 191.33m^2 were surveyed on the adjacent parking lot on which we aerial control panels were placed as the control points. The images were taken through a plexiglass window using the same type of camera utilized in Grand Canyon.

Photographs were taken from nine levels of the building to approximate nine different camera angles above a beach. An offset angle was calculated for each series of photographs. The offset angle is the angle from the bottom of the building directly below the camera location, (referred to as nadir) to the center of the photo; it ranged from 11.4 to 44.8 degrees. A photograph taken with the camera plane perpendicular to the plexiglass window (looking straight out of the building would have an offset angle of 0 degrees. The angle from the center of the photo to the camera location was also calculated and is the elevation angle of the camera. This angle ranged from 1.9 degrees to 22.34 degrees above horizontal. The negatives were digitally scanned and rectified using Erdas Imagine. Second order, non-linear transformations were used with a minimum of 8 ground control points (GCP) for each image to duplicate the methodology used in the sandbar rectifications.

4.1.2 Sechrist Dormitory (NAU) 3D study

The images used to assess angular accuracy in the previous section were also utilized as a test of three-dimensional convergence. Each image was used in combination with the adjacent image to form an image block to be converged in Imagine Orthobase. Once triangulation is

performed positional error is calculated and expressed as an RMS in pixels. The average pixel size in all of the images used in this analysis was 0.11m.

4.1.3 Aggassiz Run study

A test was conducted on the grounds of the Arizona Snowbowl at the lower part of Aggassiz Run to determine the effects of two other contributing factors in accuracy (Figure 2). One factor was positional accuracy versus distance from the principal point. For implementation in Grand Canyon, distance may be sacrificed to achieve the desired angle. An approach using three images with multiple overlaps was also evaluated. This test was designed specifically to strengthen both camera geometry and surface geometry. A high percentage of overlap within the images is beneficial for obtaining more accurate interior orientation parameters within a non-metric camera. However, ground topography will be better resolved and represented in the subsequent stereo pair with a more traditional 60 percent overlap (Warner, 1996). The third image with a high level (~90 percent) of overlap would only need to be taken once and would be used strictly as a camera calibration control.

Agassiz Run has a relatively consistent elevation angle of ~18 degrees and is ~40 meters wide. The surveyed area of interest was at the base of the slope and consisted of mildly undulating terrain with a small gully traversing the distal portion of the image. Photographic control panels (12) and visible poles (18) were substituted for rocks or other hard points. Ground topography was surveyed using a total station ground survey. The ground control point (GCP) polygon is 1229.7m^2 and is similar in size to potential sand deposits that may be instrumented in Grand Canyon. Images were taken at 8 different stations along the slope ranging

from 82 meters to 264 meters; the offset angle was held constant at 34 degrees for all images. At each station, a suite of images ranging from 60 percent to 90 percent overlap was captured.

4.1.4 Badger Camp Pilot Study

Badger Camp, located in Marble Canyon (Figure 1) was instrumented and analyzed during Phase 1. A positional error of 4.77 pixels with an average pixel size of 0.15m was the best that could be generated for this site. However, there was success in generating a robust population of automatically and manually generated tie points (236 points), which are essentially computer generated control points. A DTM was generated using these points and was 21.8% greater in volume than the area surveyed on the same day using a total station. The results generated during Phase 2 testing led us to believe the existing geometry at Badger Camp pilot study site was not optimal. In October 1999, this geometry was optimized on a cooperative downstream river trip and a new analysis based on this reinstallation is reported in Phase 2.

4.2 Phase Two Studies

4.2.1 Study Sites

The first Phase 2 site instrumented with stereo cameras was Badger Camp, located 8.0 miles downstream from Lees Ferry, Arizona (river mile 0) (Figure 3). This is the original pilot site and is situated in a fairly open part of Marble Canyon and is the longest distance to the photo center of the image of all the sites. At Badger Camp, 47 hard points were surveyed and used as control for both two dimensional and three dimensional rectifications. The hard points were located most commonly on prominent features on rocks and large boulders. The precise location

of the points on the features were sketched or photographed for accurate selection off the stereopair. The upstream camera was positioned 213.5 m away from the center of the sandbar with an offset angle and elevation angle of 21.6^{o} and 14.8^{o}, respectively, and the downstream camera was positioned 221.16 m from the center with an offset angle and elevation angle of 25.0^{o} and 13.4^{o}, respectively.

The second site was at 22 Mile, which is located 21.8 miles downstream from Lees Ferry. 22 Mile is an existing site for daily photography, originally installed in 1995, and was instrumented for stereo in June 14, 1999 (Figure 4). 22 Mile is also situated in relatively narrow part of Marble Canyon and is a fairly stable, steep high elevation sandbar mantled by a large platform of sand which is submerged by flows in excess of ~ 20,000 cfs. At 22 Mile, a mixture of four foot hourglass photo control panels and hard points located on rocks were used for control. Eleven panels were set sporadically from the water's edge up the higher extents of the sandbar; along with the panels, twenty-one rock points were surveyed. The upstream camera location has an offset angle and elevation angle of 14.4 and 15.6, respectively, and is located 178.0 m from the center of the area of interest. The downstream camera is located 62.4 m away and has an offset angle and elevation angle of 14.7^{o} and 19.6^{o}, respectively, and is positioned 147.25 m from the center of the sandbar.

The last site instrumented for this study was at Grapevine, which is located 81.2 miles downstream from Lees Ferry (Figure 5). Grapevine is located in narrow part of the inner granite gorge in Grand Canyon. This site consists of a well protected stable sandbar nestled in a small, tight eddy and armored along the back by a towering wall of bedrock. This site was "controlled" by the use of prominent rock features which were surveyed along the riverward side of the bar and a static wall base surveyed line. The wall base at the back of the bar is unchanging solid

granite and sheer, therefore, obvious vertex points along the back wall were deliberately surveyed to be used as control points. The distance from the camera to the photo center is the smallest of the three sites and the angle of obliquity (or offset angle) and elevation angles are the highest, which essentially means it is the closest to nadir. The upstream camera has an offset angle of 34.3^{o} and an elevation angle of 19.4^{o} and is located 131.6 m from the center of Grapevine Camp. The downstream camera has an offset angle and elevation angle of 33.0^{o} and 19.6^{o}, respectively and is located 129.8 m from the center of the camp.

4.2.2 Camera Instrumentation

Pentax IQZ 105 cameras were used for image capture in all of the studies. The Pentax IQZ 105 features a lens that zooms from 38mm to 105mm in focal length. The lens' effective aperture is f4 at 38mm and f7.8 at 105mm. This aperture was used because of the added light loss caused by extending the zoom lens. The lens is made up of 11 elements in 9 groups, which means two of the elements are grouped together twice and the rest are positioned in the lens by themselves. The angle of view varies from 59 to 23.5 degrees based on the focal length (Pentax Corp., 1991). Each site was instrumented with two Pentax cameras which were set to acquire images in conjunction with the ground survey. The cameras were housed in 50 caliber ammunition cans fitted with a circular hole covered with plexiglass. A sheet metal visor was fashioned to shield the plexiglass hole from direct light (Figure 6). The boxes were painted to blend in with the surrounding terrain and also had a small padlock to deter possible theft. A wooden base sits in an immovable position within the can and is mounted to the camera with a screw. The cans were semi-permanently mounted to larger boulders with clear caulk which can be removed upon completion of the project. The height above the ground principal point,

horizonatal distance, slope distance and offset angle were the criteria used for optimal location of each camera, based on Phase 1 test results, however natural surroundings greatly dictated placement.

4.2.3 Photogrammetric Control

The use of control points is required to achieve any type of image registration or rectification. Control was surveyed from previously established benchmarks used by NAU sandbar studies (Kaplinski et al., 1995) and previously verified by GCMRC surveyors (Gonzales, written communication.). Control points consisted of prominent features or photo control panels or a combination of both. Location of the points and panels were selected to fall outside of as well as within the area of interest. The points were deliberately spread out without a strong concentration in any particular region, which can bias triangulation results. A total station and hixon rod were used for control to achieve positional accuracy of +/- 0.03 m in both vertical and horizontal. To test for statistical condition of the surveyed control points, such as clumped, dispersed or random, a nearest neighbor distribution was calculated using Systat. The results at all sites suggest a dispersed population which is a desired result based on the preference of a spatially complete coverage. Dispersed data in this case is better than clumped, however a larger population of points would most likely lead to a random distribution which would be equally preferred.

4.2.4 Image Processing

Images were acquired with 100 speed print film. The film was processed and digitally transferred onto a PhotoCD at five different resolutions. The images were also digitally scanned

using a standard flatbed scanner at a resolution of approximately 1600 dpi. The scanned images were saved in uncompressed, tagged image file (TIF) format.

4.2.5 Two-Dimensional analysis - Planimetric rectification

Two-dimensional rectification was performed in Erdas Imagine using the Geometric Correction module. Control points were identified on the control image, which is the photo taken when the control survey was performed. The identified points were given surveyed positional coordinates and a second order, non-linear transformation matrix was calculated for each image. Because the camera is fixed, this transformation matrix can be used for all subsequent images taken from the same camera station whether they have visible control or not. An image is generated from the transformation matrix, which is essentially a planimetric view of the area of interest and RMS error is expressed in pixels. RMS error is the distance between the input (source) location of a GCP, and the retransformed location for the same GCP. Polygons were screen digitized and the areas were calculated in m^2. Previous research measured two-dimensional change of sandbars based on this same instrumentation setup, however, they were never able to validate the accuracy of the measurements outside of software generated RMSE (Dexter, et al., 1995). For this study, images that coincided with conventional topographic surveys were used as a comparison for area measurements. The pictures were taken either just prior to, during or just after the ground survey so the waters edge elevation was surveyed to coincide with the photo. The surveyed waters edge line which is visible in the coinciding image was used as the riverward extent to where it intersected with the NAU volume boundary (Figure 7). Boundary area was calculated for the surveyed extent and compared to the digitized

boundaries of the planimetrically rectified image. Surveys and photos from May 1999, March 2000, June 2000 and October 2001 river trips were used.

4.2.6 Three Dimensional - Stereo-photogrammetry

Three-dimensional tests were performed using Erdas Orthobase Pro and Stereo Analyst. The images were scanned the same as those used for two-dimensional analysis. Pixel size, surveyed X, Y and Z coordinates of the camera locations as well as offset angle and focal length were entered for camera interior orientation estimation. Control points that exist in all of the images were used to generate an image "block". The control points were accurately selected in the Point Measurement module in Orthobase. The interior orientation of the camera needs to be estimated using a self calibrating bundle adjustment, which is built into Orthobase. This adjustment must be made with all non-metric or uncalibrated cameras. The interior orientation consists of focal length, principal point offset and radial lens distortion. The length from the principal point to the perspective center is the focal length (Wang, 1990). An estimation of focal length was displayed on the LCD display on the Pentax camera. The principal point is mathematically defined as the intersection of the perpendicular line through to the perspective center of the image plane. This mathematical definition is the basis of triangulation, but is very difficult to determine in non-metric cameras. This parameter along with radial lens distortion is estimated by Orthobase to determine the interior orientation. Radial lens distortion causes imaged points to be distorted along radial lines from the principal point (Wolf and DeWitt, 2000). The self-calibrating bundle adjustment uses collinearity equations to model the inner cone of the camera (Kenefick et al., 1972; Albertz and Kreiling, 1989). The collinearity condition provides the numerical framework necessary to define the self calibrating bundle

adjustment, and when augmented by the equations to model the camera's interior orientation, a functional model can be defined (Wolf and DeWitt, 2000). Row and column pixel coordinates for each corner and control points were measured manually using ERDAS Imagine software package. The position of each corner of format was established by intersecting the horizontal and vertical edges of the image format corners. This approach provided a consistent technique for locating the corners on each image, which would essentially be used as fiducial marks. Control point pixel coordinates were transformed to the photo coordinate system using a two-dimensional affine transformation.

4.2.7 Image and ground space

An image coordinate or image plane system is usually defined as a two-dimensional system occurring on the image plane with its origin at the image center, normally at what is called the principal point. Typically image coordinates are expressed in microns. The ground space coordinate system is defined as the local conventional Cartesian grid established at each site where an easting is represented by the X axis, northing represents the Y axis and the vertical axis is represented as Z. Exterior orientation defines the position and angular orientation associated with an image. The positional elements of exterior orientation include camera location (X,Y,Z) and the angular elements of exterior orientation. They describe the relationship between the ground space coordinate system and the image space coordinate system. The angular orientation is defined by omega, phi and kappa (Figure 8). Rotational angles were measured by hand using a compass at each site, the measured angles were entered into the exterior orientation parameters in Orthobase.

Once the parameters are entered, a preliminary triangulation is then performed to determine the RMSE and residuals without the use of tie points. Tie points are essentially computer generated control points, which are automatically generated internally and then added to strengthen the triangulation. Typically, these points have to be edited using the Erdas Imagine Stereo Analyst module. However, care and precision in editing these points will improve the quality of the digital terrain model (DTM). When the model editing is deemed satisfactory, the image is orthorectified. The orthorectification process takes the raw digital imagery and applies an internally derived DTM based on triangulation results to create an orthorectified image. Once an orthorectified image is created, each pixel within the image should be in real world coordinates in three dimensional space, essentially a flat, draped image. Relief displacement is corrected by taking each pixel of the DTM generated from the triangulation model and finding the equivalent position in the image. A brightness value is determined for this location based on resampling of the surrounding pixels. The brightness value, elevation, and exterior orientation are used to calculate the pixel location in the orthoimage file. The DTM is extracted and saved to a raster digital elevation model (DEM). The DTM is resampled to a equally spaced grid. This surface can then be compared to a traditional total station topographic survey performed near the time of image capture. Both the surveyed data set and the extracted DEM are converted into a one meter grid which allows for direct point to point data comparison between the two datasets.

4.2.8 Surface Generation

A photogrametrically derived three dimensional surface was the end product that was used to compare accuracy and usability of the developed technique against conventional surveyed surfaces. Image blocks are created, orthorectification is performed and surfaces are

generated at the three study sites for images acquired at the same time as topographic field surveys in May 1999, March 2000, June 2000 and October 2001.

During the first editing of Badger Camp it became evident that spectral signature negatively affected elevation interpolation and this would prove to be the greatest editing problem for all of the instrumented sites. The initial resulting surfaces were very “spikey” in the Z which directly related to spectral response (Figure 9). The spikes were edited in stereo analyst by assigning correct elevations and setting internal elevation limits for discrete areas. The data were also considerably off in X and Y, GCMRC LIDAR data was used in an attempt to improve this error. Horizontal positional error was greatly attributed to the fact that although the control points were dispersed or random throughout the study site, they were clumped as it pertained to the entire image. The model skewed the surfaces outside of the control point perimeter so drastically that it also had an effect on the area bounded by control points. The exaggerated skewness was mainly caused by the extreme obliquity of the image and by vertical relief of the canyon wall or surrounding slope was not being accounted for in the control points. An attempt was made to use recently acquired LIDAR data points to provide control throughout the image (eg. cliff faces). It was hoped that the LIDAR data, although problematic to work with, was might possibly strengthen the horizontal accuracy outside of the area bounded by ground surveyed control. The LIDAR data had to be matched with the surveyed datum of the ground control points. Individual features had to be identified on a recently acquired GCMRC orthophoto as well as the oblique photographs. Once points could be positively identified, the LiDAR data was overlayed onto the orthophoto and an elevation was extracted at the point of the feature. These points were added to the control point file and used for another triangulation and

DTM generation. This test could not be performed at Grapevine because the granite wall behind the camp is overhanging.

When it became apparent that a direct surface to surface comparison was going to be problematic, another test was performed to see if the data could be normalized and compared with the ground survey on a point to point basis. Both the photogrammetrically generated and ground surveyed surfaces were converted to a coinciding 1 m grid. The points were compared to determine point to point elevation differences and all differences were averaged to calculate an average error throughout the surface. An average surface elevation was generated from the ground surveyed grid and compared to the photogrammetrically derived grid.

5.0 Results

5.1 Phase 1 Results

5.1.1Sechrist Dormitory 2D

All images were imported into Imagine and polygon areas were calculated with the AOI module. The GCP's either completely enclosed the polygon or formed the vertices for the polygon to be tested. This duplicates the GCP layer used in most of the sandbar rectifications. Another test was performed that calculated the area of a polygon that was completely outside of all GCP's but was not further than 30 meters from the most distant GCP. Summary results are presented in Table 1.

	Area=160.57	Area=183.45	Area=191.33	Area=120.78	Area=120.7
Offset angle	35.6 degrees	44.8 degrees	11.4 degrees	20.5 degrees	28.5 degrees
Area for 1.9 degrees	167.80	188.42	216.25	138.31	128.13
Area for 5.2 degrees	158.82	186.57	191.60	128.190	128.18
Area for 7.9 degrees	157.86	184.04	190.70	169.25	125.67
Area for 10.3 degrees	158.92	186.05	189.92	141.35	124.75
Area for 12.8 degrees	161.58	186.39	191.37	172.37	120.21
Area for 15.4 degrees	158.15	182.49	190.74	115.21	125.93
Area for 17.7 degrees	160.14	183.22	191.93	140.48	125.78
Area for 19.9 degrees	160.42	183.63	190.89	122.94	134.93
Area for 22.3 degrees	161.41	183.35	191.90	123.81	122.76
	----------bounded by GCP's----------			Not bounded by GCP's	

Table 1. Area generated at the Sechrist Dormitory study sit from two-dimensional rectification of oblique images. All areas in m^2

The polygon areas of 160.57m^2, 183.45m^2 and 191.33m^2 are bounded by GCP's therefore the measured areas are very close to ground truth. The polygon with 120.78 m^2 was not bounded by GCP's and was measured from two sets of photos. The photos with an offset angle of 20.5^o are not centered on the polygon and hence the area is closer to ground truth. The photos with an offset of 28.5 ^{o} have the test polygon nearly centered in the photograph.

Based on the results of this test, oblique images can be rectified and polygon area calculation can be performed precisely and accurately. Offset angle is only a limiting factor when camera elevation angles are low. Camera elevation is not as important if GCP's are readily

visible in the imagery. One factor to consider is "pixel smear" or the distortion of objects with vertical displacement. In the case of sandbars this is not important in many cases because the beaches are relatively flat. Trees, bushes and rocks do become severely distorted in the sandbar rectification process. Higher camera angles reduce pixel smear and allow consistently more accurate rectifications. However, these results show that accurate data can be obtained with camera angles as low as five degrees if the polygon area of interest is bounded by GCP's.

5.1.2 Sechrist Dormitory 3D results

Examination of convergence results reveals that when using a three-dimensional approach, offset angle and elevation angle becomes more important (Table 2). An offset angle of 11.4^{o} did not show an acceptable level of error at any elevation angle. However, the "steeper" angles (44.8^{o} and 35.6^{o}) yielded acceptable convergence errors when using elevation angles of 19.9^{o} and 22.3^{o} At an offset angle of 35.6 ^{o} there was also error acceptance with elevation angles of 17.7 ^{o} and 19.9 ^{o}, and marginal acceptance (rms = 4.011 pixels = 0.45 m) at elevation angles of 15.4^{o} and 17.7^{o}. Convergence scenarios that yielded acceptable errors were rectified to an orthophoto and bounded GCP polygons were measured to within 5 percent difference in area. Volumes were successfully calculated using a surface created with automatically generated tie points in conjunction with known control points. Actual surveyed polygon volume was 56.3 m^{3} whereas stereo-photogrammetric volume was 58.2 m^{3}. The volume analysis is of somewhat limited use because the studied area had a homogeneous spectral reflectance and was nearly flat making it absent of the complex features which may need to be modeled on a sandbar.

Offset angle can be optimized and secured in the field by monitoring the deflection or offset angle of the placement of the camera/camera's protective canister. It is evident through

this error analysis that, although elevation angle and offset angle are not serious obstacles in two-dimensional rectification, they will be necessary to ascertain and control in three-dimensional modeling.

Building Levels (Elevation Angle)	**Offset Angles**		
	44.8	35.6 Degrees	11.4 Degrees
1and2 (1.9 and 5.2)	234.563	166.233	225.455
2and3 (5.2 and 7.9)	286.209	167.409	328.993
3and4 (7.9 and 10.3)	64.781	22.84	96.092
4and5 (10.3 and 12.8)	32.005	29.816	25.493
5and6 (12.8 and 15.4)	7.319	16.555	26.557
6and7 (15.4 and 17.7)	8.117	4.011	18.430
7and8 (17.7 and 19.9)	7.356	1.562	7.995
8and9 (19.9 and 22.3)	1.220	1.003	7.834

Table 2. RMS error values at the Sechrist Dormitory study site for 3D convergence generate in Erdas Orthobase. Error is given in pixels with an average pixel size = 0.11 m

5.1.3 Aggasiz Run Study Results

Three images with varying overlap were block triangulated in Orthobase and total RMS error were calculated. Photo station blocks that yielded sub pixel accuracy were then selected for automatic and manual tie point selection. One hundred tie points were generated for each orthophoto and used to create surfaces to be compared to the total station terrestrial survey. Three of the eight stations met the criteria for “acceptable error”, which was less than one meter of vertical positional error based on control point residuals and rms error (Table 3). Total error for the sites which met the criteria was 2.88, 0.84 and 1.86 pixels and volumes were calculated at 3496m^3, 3331m^3 and 3144m^3, respectively. The actual volume surveyed using total station was 2904m^3.

Station #	Distance from Polygon center of GCP	Total RMS error in pixels. Ave pix=.16m	Calculated Volume	Surveyed Volume
1	82	31.21		
2	96	42.45		
3	106	2.88	$3496m^3$	$2904m^3$
4	132	0.84	$3331m^3$	$2904m^3$
5	147	12.67		
6	176	1.86	$3144m^3$	$2904m^3$
7	243	22.94		
8	264	16.48		

Table 3. Aggassiz Run station data.

5.1.4 Phase 1 Discussion

The results generated from phase 1 were used as guidelines for Phase 2 site placement, when the sites were instrumented in Marble and Grand Canyons. Phase 1 has shown that offset and elevation angles are important for two-dimensional analysis and are critical for three-dimensional work where they need to be measured accurately and monitored closely. During Phase 1, the ability to successfully generate three-dimensional surfaces using relatively inexpensive, off – the- shelf cameras was demonstrated. The accuracy of these surfaces ranged from greater than 95% to less than 80%. This level of accuracy may have been useful for monitoring large-scale, short-term erosion and deposition as was evident in Grand Canyon following the 1996 Bar/Habitat Building Flood. This technique may also be beneficial for monitoring archaeologically sensitive sites where human visitation is undesired, rapidly changing aeolian deposits or for calculating biomass in vegetated areas containing endangered species. Although field time and equipment costs are minimal, three-dimensional analysis is laboratory time intensive. During Phase 1 it became obvious that a well trained and patient photogrammetrist is required for tedious and rigorous stereo editing. An optimal situation

would be where surveyor and photogrammetrist are the same person or can work closely together to guarantee accuracy and placement of surveyed hard points other than photo panels, such as rocks. In a study of the Cordilleran and Appalachian thrust belts Deblonde et al. 2000 used a similar technique to map rock structure using a surveyor/photogrammetrist. Given the versatility of the application, inexpensive equipment and attractiveness of the software applicability and cost, it was decided that three-dimensional oblique stereo-photogrammetry would be further evaluated in Phase 2 as an option for Grand Canyon, when absolute accuracy is not the number one priority.

5.2 Phase 2 Results

At Badger, polygons were digitized around rectified images and compared to the boundary derived from the survey. The differences in area of the polygons for the four different comparisons were 1.9%, 1.0%, 6.0% and 3.1% which has a mean of 2.5 % difference (Table 4). This difference is reflected only in the riverward portion of the polygon, because the rear boundary points are inserted as anchor points after the rectification. The 22 mile polygons were compared in the same way and have differences of 6.2%, 10.8%, 2.8% and 8.2% percent which has a mean of 6.9%. The higher percent error comparison can be correlated to the lack of control on the river side of the sandbar where the reattachment point protrudes beyond the extent of the control points. Owing to the obliquity of the data, essentially any area outside of the perimeter extent of the control points is unusable data. This problem does not exist in this severity when using near nadir conventional photogrammetry. Grapevine had a subpixel RMSE for all four transformations. The resulting polygon comparisons were very close yielding differences of 1.9%, 5.1%, 3.6% and 2.4% with a mean of 3.2%.

Badger	Surveyed area	Digitized area	% difference	RMSE
5/6/99	1771.53m^2	1805.68 m^2	1.9	1.46
3/18/00	1861.65 m^2	1843.29 m^2	1.0	.80
6/4/00	1888.63 m^2	2002.27 m^2	6.0	2.11
10/3/01	1904.21 m^2	1963.45 m^2	3.1	1.76
22 Mile	**Surveyed area**	**Digitized area**	**% difference**	**RMSE**
5/7/99	2267.21 m^2	2408.02 m^2	6.2	2.17
3/20/00	1724.88 m^2	1911.37 m^2	10.8	2.30
6/5/00	2130.02 m^2	2189.44 m^2	2.8	1.80
10/6/01	2335.00 m^2	2525.68 m^2	8.2	1.97
Grapvine	**Surveyed area**	**Digitized area**	**% difference**	**RMSE**
5/12/99	2103.07 m^2	2143.64 m^2	1.9	.27
3/27/00	2093.79 m^2	2200.13 m^2	5.1	.46
6/11/00	2173.29 m^2	2250.74 m^2	3.6	.72
10/11/01	1859.31 m^2	1904.28 m^2	2.4	.77

Table 4. Surveyed area versus digitized area from a photogrammetrically derived image at Badger, 22 Mile and Grapevine study sites. Areas are represented in m$^{2.}$.

5.2.1 Surface Comparison

Badger Camp surfaces were clipped using the same polygon boundary generated for the two-dimensional analysis which was derived from the waters edge line and the back boundary of the NAU volume boundary. Surfaces generated with and without LIDAR supplemented control were compared volumetrically for four different dates. (Table 5). The resulting surfaces created without the assistance of LIDAR points were off in the horizontal by an average 24 m in northing (Y) and 6 m in easting (X). Surfaces which used LIDAR were off by an average of 11 m in Y and 8 m in X. Obvious hard points from the resulting imagery were used as registration points to match the generated surface to the ground surveyed surface as best as possible. The registration was performed so that relative surface volume differences could be calculated.

Percent difference was calculated from above the surface base elevation that existed at the boundary contact; therefore the percent difference is relative because vertical agreement of base level can be in error of 1 - 3 m.

Observation Date	**Surveyed Volume**	**Photogrammetric Surface Volume**	**% difference**
5/6/99	2493	3020	21.1
3/18/00	2433	3055	25.6
6/4/00	3622	4278	18.1
10/3/01	3535	3898	10.3
Observation Date	**Surveyed Volume**	**Photogrammetric Surface Volume with LIDAR control**	**% difference**
5/6/99	2493	2951	18.4
3/18/00	2433	2854	17.3
6/4/00	3622	4165	15.0
10/3/01	3535	3817	8.0

Table 5: Badger Camp surface comparison. Volume is in m^3.

22 Mile surfaces were clipped at the extent of the NAU ground survey high elevation (HAZ) boundary in the same way as the previous site. Surfaces generated with and without LIDAR supplemented control were compared volumetrically for four different dates (Table 6). The resulting surfaces created without the assistance of LIDAR points had an error in the horizontal by an average of 6 m in Y and 3 m in easting X. Surfaces which used LIDAR were off by an average of 5 m in x and 2 m in easting.

Observation Date	**Surveyed Volume**	**Photogrammetric Surface Volume**	**% difference**
5/7/99	3761	3954	5.1
3/20/00	4523	5301	17.2

6/5/00	5482	6587	20.2
10/6/01	3468	4011	15.7
Observation Date	**Surveyed Volume**	**Photogrammetric Surface Volume LIDAR control**	**% difference**
5/7/99	3761	3902	3.7
3/20/00	4523	5111	13.0
6/5/00	5482	6547	19.4
10/6/01	3468	3856	11.2

Table 6: 22 Mile suface comparison. Volume is in cubic meters

Grapevine surfaces were clipped at the extent of the NAU ground survey volume boundary. Surfaces generated were compared volumetrically for four different dates which are shown in Table 7, LIDAR supplemented control was not tested at this site. Photogrammetric surfaces have an average horizontal error of 1meter in Y and 3 meters in X.

Observation Date	**Surveyed Volume**	**Photogrammetric Surface Volume**	**% difference**
5/12/99	3880	4166	7.4
3/27/00	6639	7700	16.0
6/11/00	7004	7945	13.4
10/11/01	4661	5574	19.6

Table 7: Grapevine surface comparison. Volumes are in cubic meters.

5.2.2 Average surface elevation

At all sites the previously explained one meter grid was compared from each survey and photo. The photogrammetric grid was edited to delete residual spikes by manually removing

extreme outlying points. Average surface elevation is reported for each ground survey and photogrammetric surface with RMSE.

Badger	**n**	**Average Survey Grid point Elev. (m)**	**Average Photo Grid Point Elev. (m)**	**Calculated RMSE (m)**
5/6/99	1708	95.88	98.26	3.19
3/18/00	1823	95.98	97.90	3.01
6/4/00	1843	95.99	98.00	3.03
10/3/01	1702	96.02	98.15	3.08
22 Mile				
5/7/99	1646	88.29	90.77	3.02
3/20/00	1747	88.23	90.76	3.24
6/5/00	2111	88.06	90.58	2.76
10/6/01	1576	88.69	90.47	3.33
Grapevine				
5/12/99	1534	96.57	98.12	2.15
3/27/00	1894	96.18	97.89	2.32
6/11/00	1843	96.20	97.84	2.21
10/11/01	1743	96.346	98.15	2.42

Table 8: Average grid point elevation for surveyed photogrammetrically derived surfaces at Badger, 22 Mile and Grapevine study sites.

Grid points from the photogrammetric derived surfaces were adjusted for the average difference at each survey to “float” the surface down (Table 8).

5.2.3 Phase 2 Discussion

Phase 2 results suggest that accurately representing ground surfaces based on oblique terrestrial photogrammetry with non-metric cameras is not possible at this time. The two

greatest factors contributing to the high residuals of control points produced in the block triangulation is the inability to accurately estimate the interior parameters of the camera and the lack of reliable control points in the areas in front of and beyond the “controlled” sandbar. These areas typically consist of the river in the foreground and talus slopes or cliff walls in the background. Attempts were made using the newly acquired GCMRC LIDAR data to extract accurate locations of prominent features in the images. LIDAR points were overlaid on orthorectified imagery and coordinates were taken from features which could be accurately located in both the oblique imagery as well as the orthophoto. To be usable as control, the points needed to be rotated from Arizona stateplane coordinate system ellipsoid height to the established local coordinate system at each site. Based on error anlysis performed on the vertical position of the LIDAR points (Manone et al. 2001) and the contractor reported ground spot spacing, LIDAR derived control points are accurate to .7m in vertical and 1meter in horizontal

Although Orthobase is able to triangulate a model, the residual error of each control and tie points are still very high, ranging from 1 - 42 meters. Gross errors not only existed in the vertical dimension but also were strong in the X and Y as well. Where two-dimensional rectification of the oblique photos using standard geometric correction produced favorable results and accurately represented the planimetric area of the sandbar, three-dimensional model results were off from 1 to 24 m. The horizontal error could be corrected by rotating the photogrammetric surfaces based on visible known points. Relative surface comparison based on volume calculations showed that there was disagreement ranging from 3.7% to 25.6%. Using LIDAR supplemented control improved the models in every case but failed to substantially improve the relative surface comparison substantially. Owing to the fact that the LIDAR data improved every model, it is concluded that controlling the outer areas of the image is essential.

Large volumetric errors in relative surface comparison suggest that this technique with the available software is not reliable at this time for accurate surface modeling. In all cases the hard control points and the panel points were the base or "low" points in the model with the generated surface "rising" above these points in a non - predictable way.

The alternative hypothesis that average surface elevation calculated from grid points generated from a photogrammetrically derived DTM is representative of three-dimensional geomorphic condition of sediment deposits resulted in similarly poor results. Grid coverages were generated from the surfaces at 1 m spacing with the sample number of points ranging from 1534 – 2111. RMSE ranged from 2.15 to 3.33 m. The average difference was subtracted from each sample point of the photogrammetrically derived grid and the error was calculated. Calculated RMSE ranged from .9 – 2.10 m for the adjusted values suggesting that the surface is not representative even when normalized based on implied average offset.

6.0 Summary and Conclusions

The primary goal of this project was to test the feasibility of implementing a stereo based approach to monitoring sandbars on a daily scale using existing, field tested off-the-shelf cameras. Using stereo would unleash the ability to monitor daily change in three dimensions and ultimately provide the opportunity to quantify volume change over short time periods. The need to develop this tool became apparent following the 1996 BHBF when daily cameras revealed large deposition followed by rapid erosion and bank failure which logistically could not be measured to determine a rate of change using traditional surveying techniques. Ideally, if the results were acceptable, then imagery collected on subsequent days could be used to quantify and monitor short term, large scale change. Based on the results from this pilot feasibility study it is

well proven that two-dimensional change can accurately be measured and quantified using planimetric rectification processes. However, with the existing instrumentation, three dimensional monitoring and change detection is not reliable or accurate. Although progress is being made and success has been tasted using terrestrial photogrammetry using uncalibrated cameras, cheap cameras with plastic lenses and the inability to precisely align and configure camera geometry in rugged, varying terrain such as Grand Canyon have proven to be ineffective. Therefore, at this time the null hypothesis that 2D and 3D analysis of sediment deposits using terrestrial photogrammetry is less value to the existing technique of two-dimensional analysis by conventional total station surveying, can not be rejected.

Although presently it is not possible, this technique may prove to be useful in the future. Increased elevation angle, which would bring the camera location closer to nadir would undoubtedly improve accuracy by removing the high level of obliquity. Increased elevation angle would also remove the need to acquire control points in hard to survey places where topographic surfaces are currently represented by inaccurate remotely sensed data. Along with better quality cameras, the focus of this type of monitoring should switch from instrumented sites accessed by the river to narrow parts of the Canyon which are more easily and efficiently accessed from the rim and will undoubtedly improve the elevation angle. Daily photographic monitoring still provides a valuable, reliable and inexpensive method to visually document sandbar condition over a short temporal scale across a long period of time and should be continued.

Literature Cited

Albertz, J., and J. Kreiling, 1989. Photogrammetric Guide, Herbert Wichmann Verlag, Karsuhe, 284 p.

Bohnenstiehl, K., 1997, Testing planimetric rectification in a controlled environment., Abstract. *Third Biennial Conference on Research in Colorado Plateau National Parks*, Northern Arizona University, Flagstaff, Az.

Colllins, S.H., and Moon, G.C., 1979. Stereometric measurement of streambank erosion. Photogrammetric Engineering and Remote Sensing, 45, 2, 183-190.

Davis, P.A., Mietz, S., Manone, M.F., Kohl, K., Gonzales, F.M., Hazel, J.E., Kaplinski, M., and Hazel, J.E., 2002, Evaluation of airborne LIDAR and photogrammetric surveys for monitoring sediment and vegetation resources within the Colorado River corridor of the Grand Canyon. Proceedings of the 15th PECORA conference. ASPRS. Integrating remote sensing at the global, regional and local scale. Denver, Co. 10pp.

Deblonde, C., Vuitton, R., Marcil J.S., Lebel D., Malo M., Stockmal G., Tao V., Da Roza R., and Gravel C., 1999, Experiments in digital photogrammetry for structural mapping in the Cordilleran and Appalachian foreland thrust belts. ASPRS Annual Converence Proceedings, Portland, Or., United States, May 17-21 1999, pp 918-927.

Dexter, L.R., B.L. Cluer, and M.F. Manone, 1995, Using land-based photogrammetry to monitor sandbar stability in Grand Canyon on a daily time scale, in *Proceedings of the Second Biennial Conference on Research in Colorado Plateau National Parks*, edited by C. Van Riper III, pp. 67-86, Nat. Park Ser. Transactions and Proceedings Series NPS/ NRNAU/NRTP-95/11.

Dexter, L.R., B.L. Cluer, M.F. Manone, R.M. Weber, G. Dunno, R. Botts, M. Etter, M. Applegarth, 1994, Daily dynamics of Grand Canyon sandbars: monitoring with terrestrial photogrammetry, Final Report to the National Park Service, Northern Arizona University, Flagstaff, Arizona. 156 p.

ERDAS Inc., 1992, P.C. Erdas v. 7.5 software, user's guide and technical manuals. ERDAS, Inc., Atlanta, Georgia.

Hazel, J.E.Jr., M. Kaplinski, M.F. Manone, R.A. Parnell, A. Dale, J. Ellsworth, L.R. Dexter, 1997, The effects of the 1996 Glen Canyon Dam Beach/Habitat-Building Flow on Colorado River sand bars in Grand Canyon, Final report to the Glen Canyon Environmental Studies, cooperative agreement no. 1425 96 FC 81 05001.

Hazel Jr., J.E., M. Kaplinski, R. Parnell, M. Manone, and A. Dale, 1999, Topographic and Bathymetric changes at thirty-three long-term study sites, in *The Controlled Flood in Grand Canyon, Geophys. Monogr. Ser*., vol. 110, edited by R.H. Webb, J.C. Schmidt, G.R. Marzolf, and R.A. Valdez, pp. 161-184, AGU, Washington, D.C., 1999.

Kaplinski, M., J. E. Hazel Jr., and S. S. Beus, 1995, Monitoring the effects of Interim Flows from Glen Canyon Dam on sand bars in the Colorado River Corridor, Grand Canyon National Park, Arizona, Final Report to Glen Canyon Environmental Studies, 62 pp., N. Ariz. Univ., Flagstaff, AZ.

Kenefick, J.F., M.S. Gyer, and B.F. Harp, 1972. Analytical self-calibration, Photogrammetric Engineering and Remote Sensing, 38: 1117-1126.

Lane, S.N., Chandler, J.H., and Richards, K.S., 1994. Developents in monitoring and modeling small scale river bed topography, Earth Surface Processes and Landforms, 19, 349-368

Lane, S.N., Richards, K.S., and Chandler, J.H., 1996. Discharge and sediment supply controls on erosion and deposition in a dynamic alluvial channel. Geomorphology, 15, 1-15.

Lo, C.P., and Wong, F.Y., 1973. Micro scale geomorphology features. Photogrammetric Engineering and Remote Sensing, 39, 12, 1289-1296

Manone, M. F., and Mietz, S., 2001, Preliminary evaluation of LIDAR data acquired prior to and following the September 2001 Colorado River experimental flow., Abstract, Glen Canyon Dam Adabpive Management Program Science Symposium, Flagstaff, Az. April 26-27.

Manone, M.F., B.L. Cluer, and L.R. Dexter, 1994, Monitoring sand bar stability in Grand Canyon on a daily time-scale: American Association of Geographers, Abstract, 90th Annual Meeting, San Francisco, p. 234.

O'Brien L. E., Coleman, A., Blank B.L., Grams P. E., and Schmidt J.C., 2000, Testing the application of phtotogrammetry to monitor topographic changes of sandbars in the Colorado River ecosystem. Report to the GCMRC physical resource program, Utah State University, Department of Geography and Earth Resources, Logan, Utah, 55p

Pentax Corportation, Pentax zoom105 Operating Manual. 1991. 49p.

Schmidt, J. C., Grams, P. E., and Webb, R. H., 1995, Comparison of the magnitude of erosion along two large regulated rivers. Water Resources Bulletin, Vol. 31, No. 4, 617-630

Schmidt, J. C., and Graf, J. B., 1990, Aggradation and degradation of alluvial sand deposits, 1965 to 1986, Colorado River, Grand Canyon National Park, Arizona, *U.S. Geol. Surv. Prof. Paper 1493*, 74 pp.

Stojic, M., Chandler, J. H., Ashmore, P. and Luce, J.,1999, The assessment of sediment transport rates by automated digital photogrammetry. Photogrammetric Engineering and Remote Sensing.

U.S. Department of the Interior, 1995, Operation of Glen Canyon Dam: Colorado River Storage Project, Arizona, Final environmental impact statement, Bur. of Reclamation, Salt Lake City, UT.

Wang, J., 1990, A fast solution to local viewshed computation using grid based digital elevation models, Photogrammetric Engineering and Remote Sensing, V. 62, n.10, p. 1157.

Warner, W. S., Graham, R. H., and Read, R. H., 1996 , Small Format Aerial Photography.
American Society for Photogrammetry and Remote Sensing. 348p.

Welch, R., and Jordan, T.R., 1983. Analytical non-metric close range phtogrammetry for monitoring stream channel erosion. Photogrammetric Engineering and Remote Sensing, 49, 3, 367-374.

Wolf, P. R., and Dewitt, B. A., 2000, Elements of Photogrammetry. McGraw-Hill, USA. 605pp.

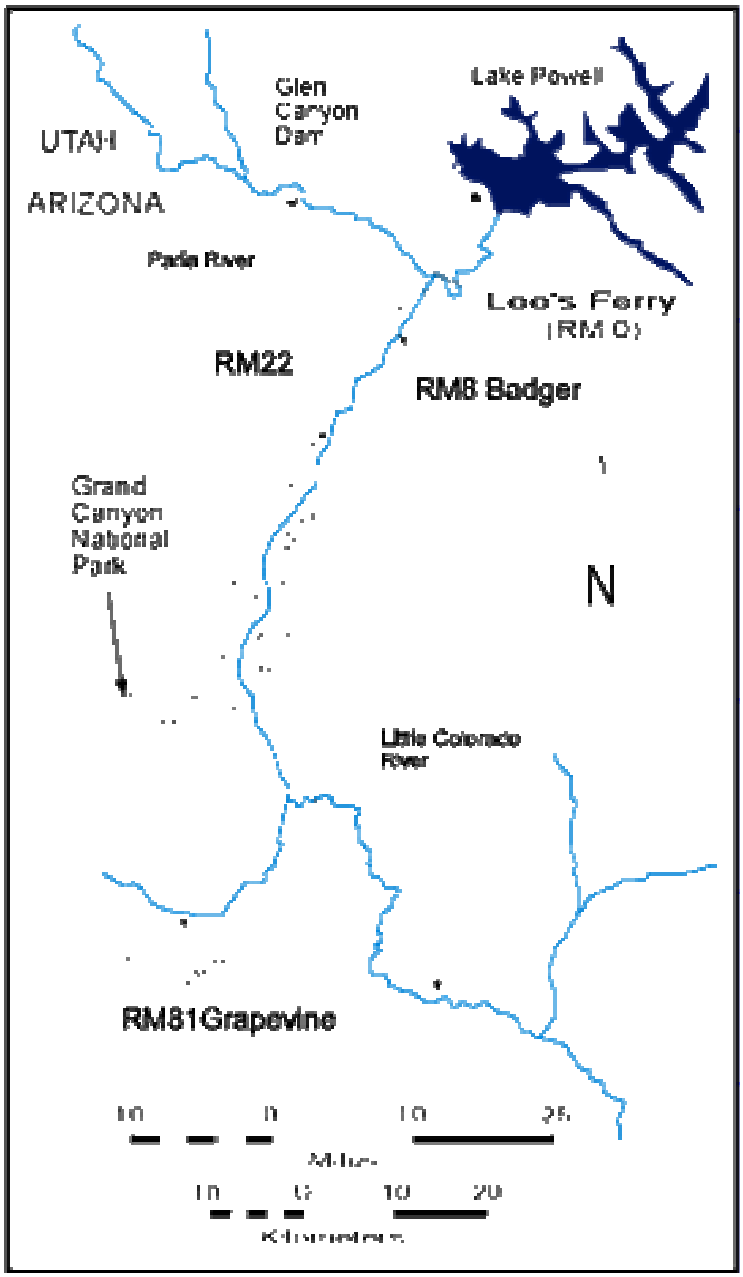

Figure 1. Location map of sites used for study.

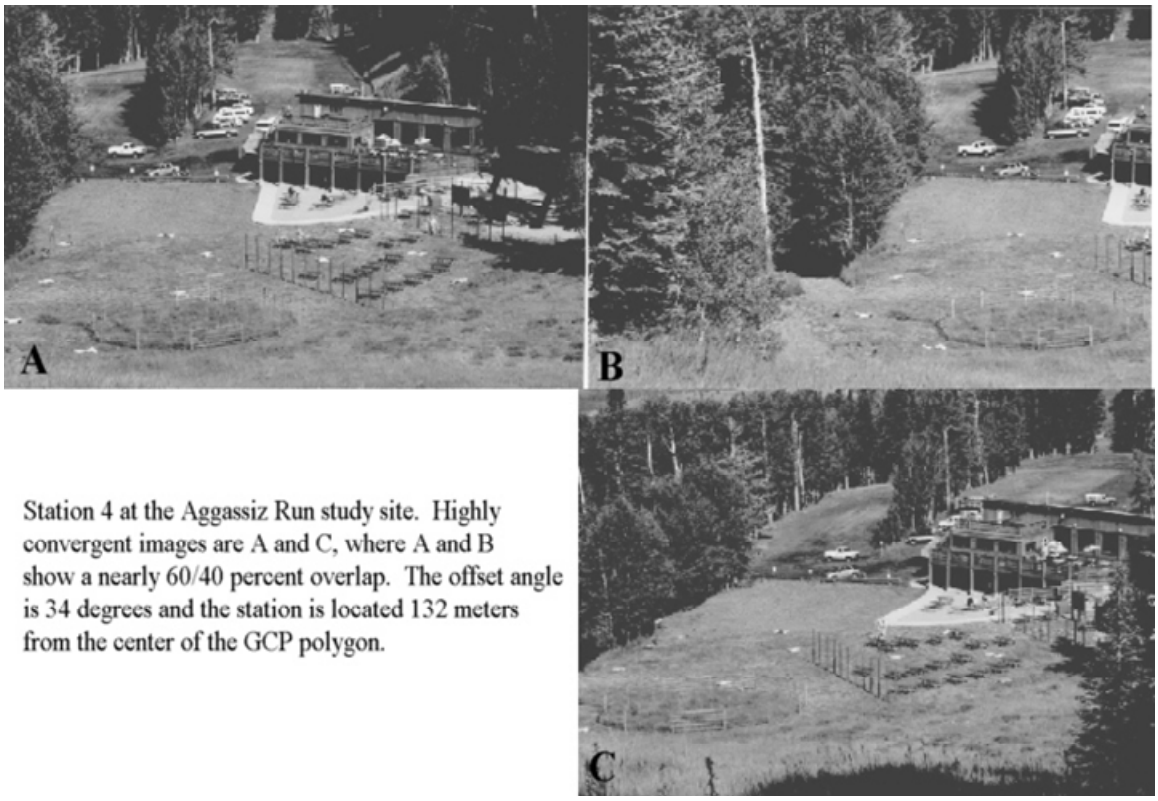

Station 4 at the Aggassiz Run study site. Highly convergent images are A and C, where A and B show a nearly 60/40 percent overlap. The offset angle is 34 degrees and the station is located 132 meters from the center of the GCP polygon.

Figure 2. Agassiz Run study site location.

A

B

Figure 3. Oblique camera views from upstream (A) and downstream (B) cameras at Badger Camp.

A

B

Figure 4. Oblique camera views from upstream (A) and downstream (B) cameras at 22 Mile site.

A

B

Figure 5. Oblique camera views from upstream (A) and downstream (B) cameras at Grapevine.

Figure 6. Camera box housing used at instrumented sites.

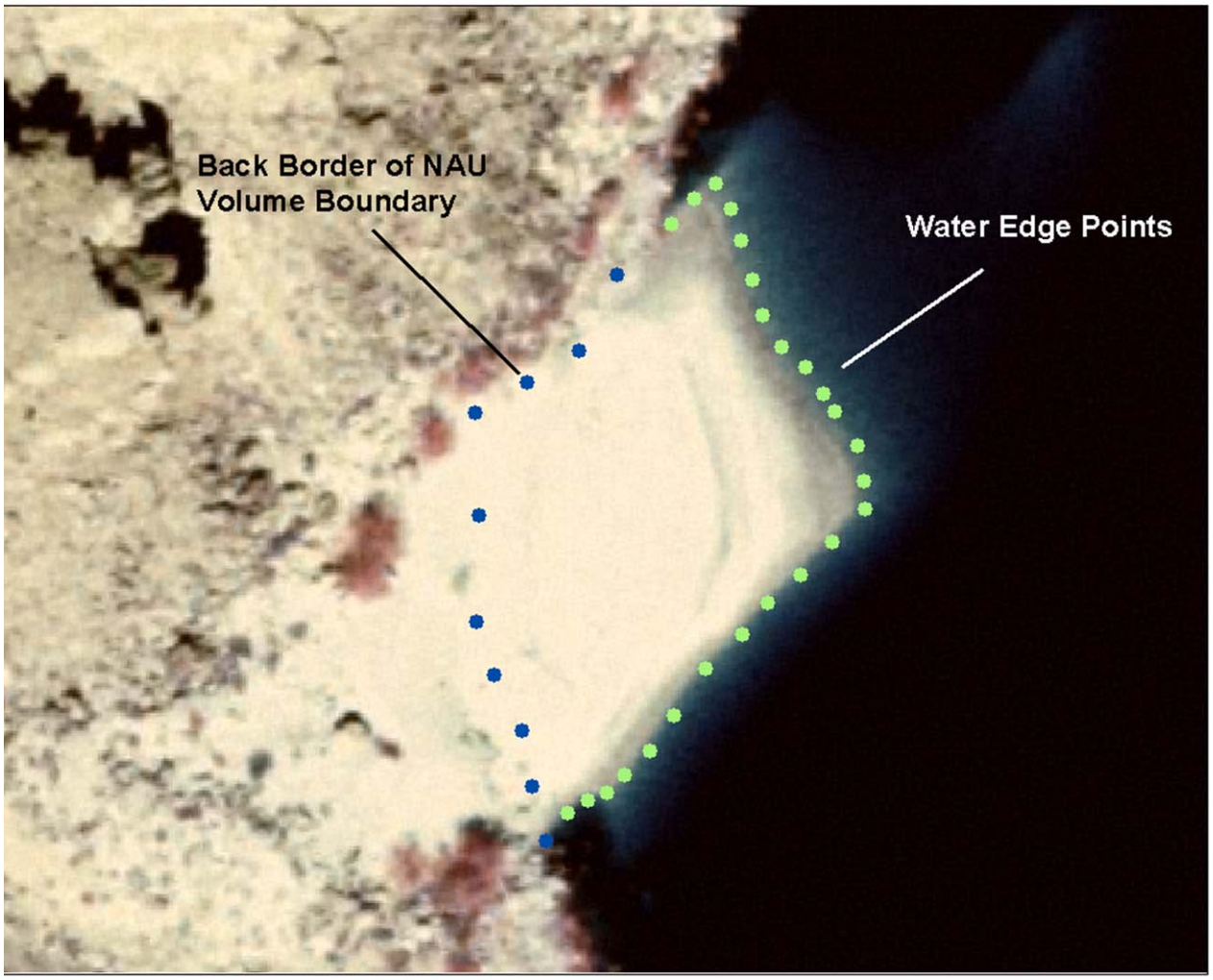

Figure 7. Analysis boundary at 22 mile.

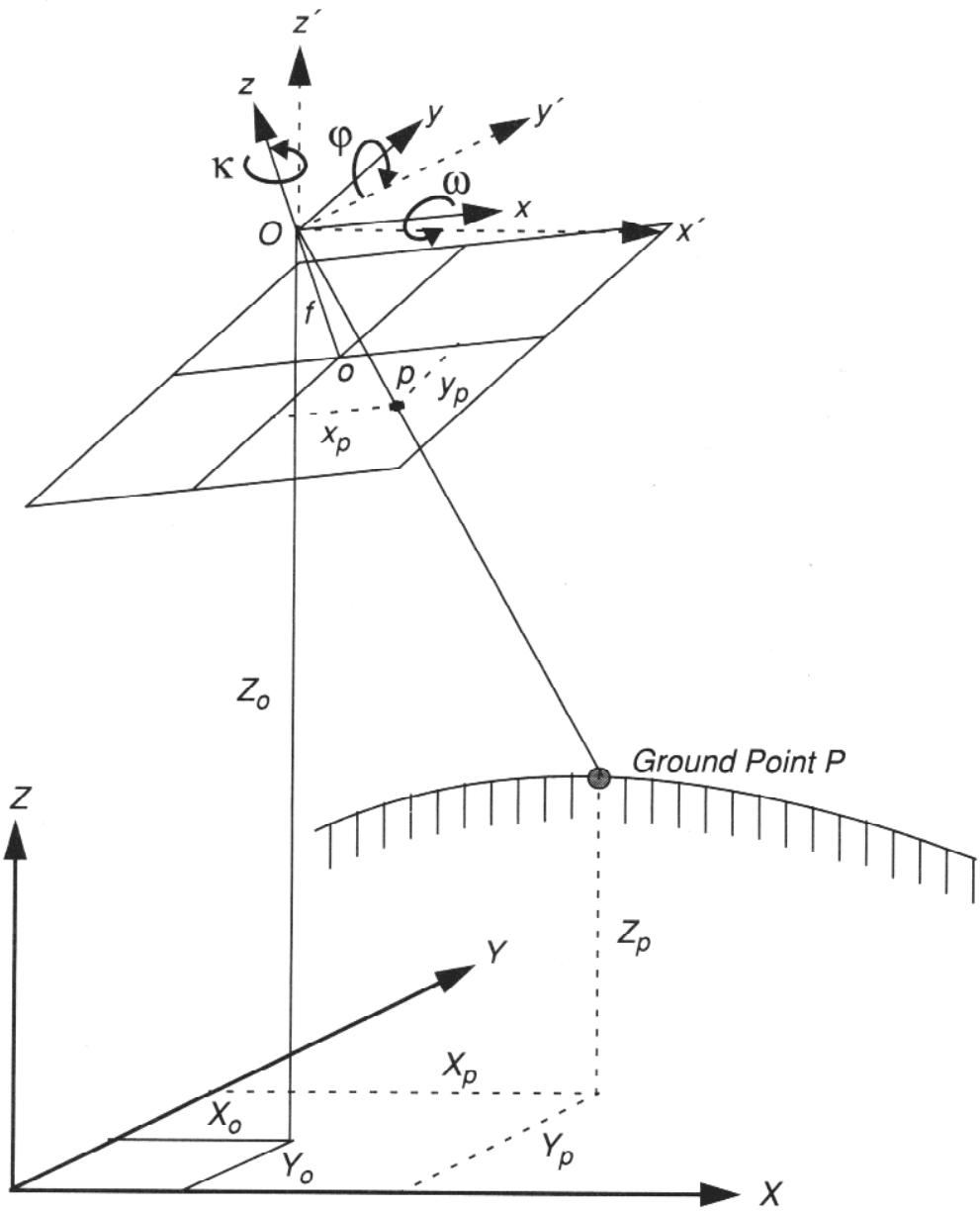

Figure 8. Exterior orientation parameters.

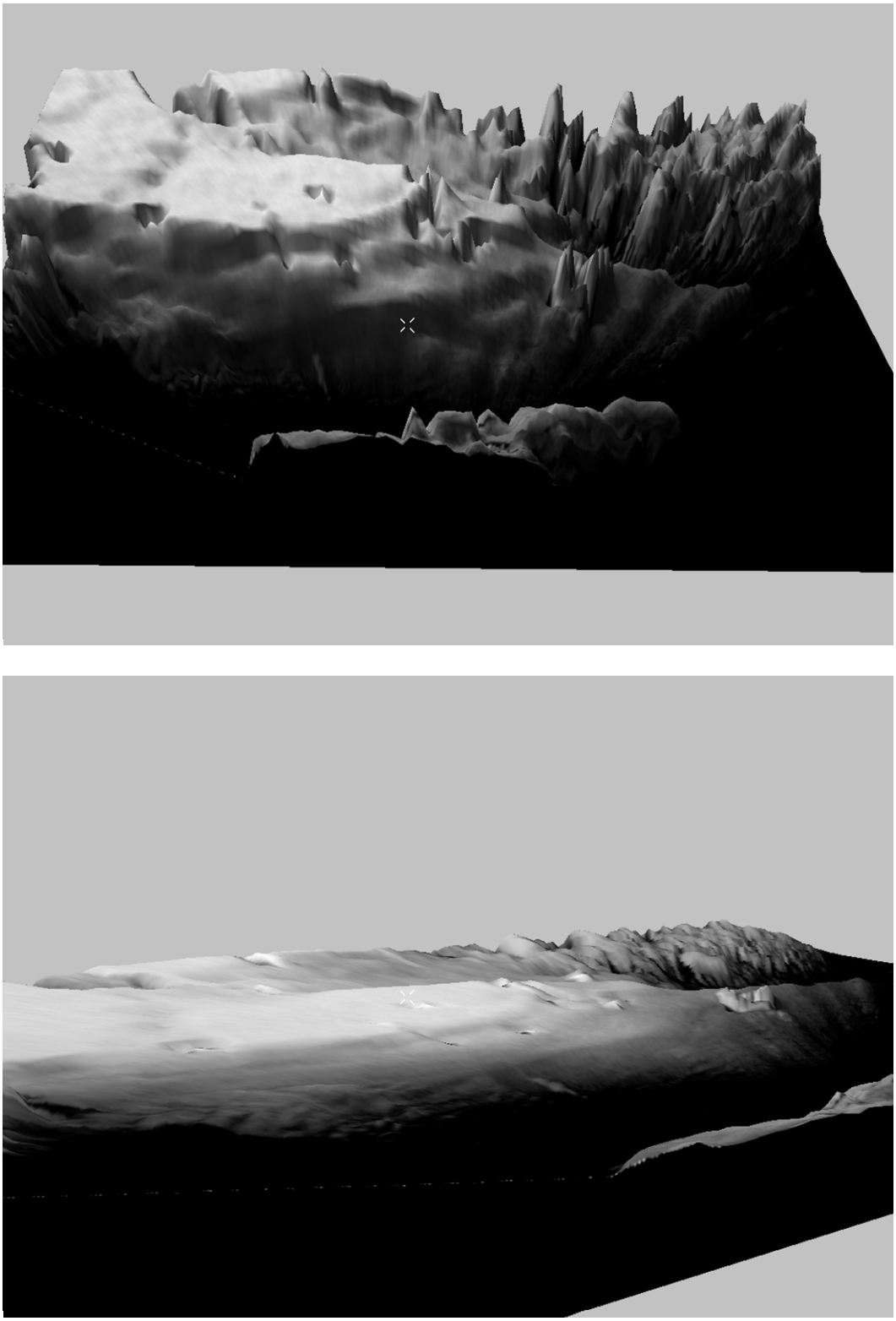

9. Photogrammetrically derived surface prior to editing (A) and post editing (B)