BIO/WEST, Inc.

Resource Management
and Problem Solving Services

Report No. TR 250-03
BIO/WEST, Inc.

CHARACTERIZATION OF THE LIFE HISTORY AND ECOLOGY OF THE HUMPBACK CHUB IN THE GRAND CANYON (CONTRACT NO. 0-CS-40-09110)

BOATING SAFETY AND OPERATIONS PROTOCOL

Prepared for:

Team Members and Volunteers
BIO/WEST Field Teams

Prepared by:

BIO/WEST Inc.
1063 West 1400 North
Logan, UT. 84321

Richard A. Valdez
Principal Investigator

William J. Masslich
Project Leader

July 29, 1991

TABLE OF CONTENTS

I. INTRODUCTION 1

II. COORDINATION WITH LOGISTICS CONTRACTOR 2

III. RIVER ETIQUETTE 3

IV. BOAT AND MOTOR SPECIFICATIONS 5

V. BOATING EQUIPMENT 7

VI. PROCEDURES FOR MOTOR STARTUP AND BOAT LAUNCH 8

VII. SAFETY EQUIPMENT 10

VIII. DESIGNATION OF BOAT OPERATORS 11

IX. TRAINING FOR OPERATORS AND PASSENGERS 12

X. EMERGENCY PROCEDURES 14

XI. EQUIPMENT DAMAGE OR LOSS 16

I. INTRODUCTION

This Boating Safety and Operations Protocol was developed for BIO/WEST team members and volunteers involved in studies of the endangered humpback chub in the Grand Canyon. The purpose of the protocol is to familiarize personnel with research equipment and safety procedures associated with fish sample activities in the Grand Canyon. In accordance with Bureau of Reclamation Contract No. 0-CS-40-09110 to BIO/WEST, all boating activities conducted in performance of this investigation in the Grand Canyon are consistent with the policies of the National Park Service as detailed in The Colorado River Management Plan (Appendix C, Draft Commercial Operating Procedures), or as coordinated with the River Subdistrict.

BIO/WEST recognizes the magnitude of this and the other studies of the Glen Canyon Environmental Studies (GCES) and acknowledges the risks inherent in conducting research in such isolated and potentially hazardous conditions as exist in the Grand Canyon. BIO/WEST also recognizes that we are not the only people in the canyon and that our activities affect the experience of other people we encounter on the river. Consequently BIO/WEST has two major goals regarding our boating activities during this study:

1. Successful completion of this study without incurring serious injury to any person involved.
2. Conduct our research and boating activities in a courteous and responsible manner to minimize the impact of our presence to others using the canyon.

BIO/WEST believes that the first step to accomplishing these goals is to hire mature, responsible, and experienced people as part of the field teams. The principle behind this philosophy is that these people have an understanding of how to cope with arduous

conditions; that they have an inherent appreciation for the canyon; and that they will act in a safe, responsible and courteous manner at all times. BIO/WEST will strongly adhere to these basic principles and will not hesitate to terminate involvement of any person that does not conduct themselves accordingly.

The second step in maximizing safety associated with this activity is to provide thorough training for all personnel associated with the project. Much of this training is conducted on the river in conjunction with specific aspects of safety and boat operations as presented in this document. Safety and boat operations are also formally discussed at semi-annual workshops and informally at staff meetings. This protocol details requirements of BIO/WEST personnel regarding safety procedures, boat operations, and training.

II. COORDINATION WITH LOGISTICS CONTRACTOR

Research trips conducted for the Grand Canyon Humpback Chub Study require participation by both the biological research contractor, BIO/WEST, and the logistics contractor, OARS. Each company has dedicated manpower and equipment to the project and each recognizes the risks and liabilities associated with the project. Although cooperation between BIO/WEST and OARS is essential for successful completion of the project, it is also necessary to clearly define roles and responsibilities during research activities in the Grand Canyon.

BIO/WEST acknowledges OARS experience and expertise in conducting commercial trips and coordinating logistical support for GCES scientific research in the Grand Canyon. The logistics support provided by OARS clearly enhances the efficiency and safety of BIO/WEST's performance. This insures appropriate accommodations for transport and storage of research equipment and boats which enhances safety and equipment care. The

knowledge and experience of the OARS boatman is vital to insuring the safety of all personnel during transport to and from study sites. It has, and will continue to be made clear to all BIO/WEST personnel that when OARS equipment is being used for any facet of the study, the OARS boatman have complete jurisdiction on how their boats and equipment are used.

Once the study site is reached, and the BIO/WEST research boats are launched or at any other time that BIO/WEST boats are on the water as part of the study, BIO/WEST assumes authority and responsibility for the operation and use of those research boats. It is recognized however, that in the event of a boating accident or other emergency, the cooperation and coordination between OARS and BIO/WEST personnel and equipment is vital. The BIO/WEST Project Leaders will confer, when possible, with the OARS boatman regarding safety, river etiquette, and boat operations. Suggestions will be taken under advisement and final decisions on the use and operation of the research boats made by the BIO/WEST Project Leader.

III. RIVER ETIQUETTE

BIO/WEST recognizes and concurs with the Grand Canyon Courtesy brochure on river etiquette developed by the Grand Canyon River Guides, the National Park Service, and private boaters. We agree that the best policy is to <u>be reasonable, be flexible, and communicate</u>.

In order to reduce the impacts of BIO/WEST operations to other users in the Grand Canyon the following guidelines have been established for the operation of research boats and encounters with other users:

1. Research boats will generally be transported on OARS support boats to study sites to minimize visibility and reduce wear on equipment. Exceptions to this will be dictated by logistical considerations and will be at the discretion of the Project Leader under advisement from the OARS Head Boatman.
2. When other trips are encountered during downstream travel, motors should be throttled down and efforts be made to pass by the trip as discretely and courteously as possible. A "Hi, how ya doin" will help immensely.
3. During upstream travel, research boats will pull over to the shore or to the edge of the navigable channel and let oncoming downstream travelers pass.
4. Unauthorized passengers are <u>not</u> allowed on the BIO/WEST boats at any time except in the case of certain emergency situations. Unauthorized personnel include all those except; BIO/WEST employees, participating biologists or volunteers (i.e. ACT members or GCES volunteers) and OARS personnel. Transport of others than those listed above must be approved by the Principle Investigator or Project Leader. During downstream travel, only BIO/WEST employees and participating Bureau biologist are allowed in the boats.
5. When operating research boats in areas where other parties are camping, the parties will notified of the research activities and asked if these conflict with their visit to the canyon. Efforts will always be made to operate research boats with discretion and courtesy.
6. Effort will be made to avoid potential conflicts between BIO/WEST and other boaters over camping areas.
7. There will be no alcoholic beverages on the research boats at any time.

8. Use of illegal drugs will not be allowed at any time during research trips.

IV. BOAT AND MOTOR SPECIFICATIONS

The following section provides a general description of the boats and equipment that will be used by BIO/WEST for the Grand Canyon Humpback Chub Study. The research boats are SU-16 and SH-170 inflatable boats made by Achilles Corporation. Each is powered by a 40 horsepower Yamaha outboard motor. We have five research boats, two SU-16's and three SH-170's.

A. Achilles SU-16 - Electrofishing Boat

The SU-16 is a Sport Utility Boat manufactured by Achilles Corporation. It is made of hypalon (double 840 denier nylon core fabric) and has an aluminum-plated fiberglass transom. The floor consists of sectional aluminum floorboards held by lateral stringers, and the boat has an inflatable keel. The SU-16 is easily recognized by the square bow, and is used on this project as an electrofishing boat. Figure 1 presents a layout of the SU-16 rigged for electrofishing. Factory specifications for the SU-16 are as follows:

Overall Length - 16'0"

Inside Length - 10'10"

Overall Beam - 6'9"

Inside Beam - 3'3"

Tube Diameter - 21"

Weight - 360 lbs.

Loading Capacity - 3,210 lbs.

No. of Air Chambers - 5 plus air keel

Recommended H.P. - 40 (long shaft)

B. Achilles SH-170 - Tracking/Netting Boat

The SH-170 is a Sport Heavy Duty Boat. It is constructed of the same material and has the same floor system as the SU-16. The SH-170 is easily recognized by the pointed bow, and is used on this project as a radiotracking and netting boat. Figure 1 presents a layout of the SH-170 rigged for tracking or netting. Factory specifications for the SH-170 are as follows:

Overall Length -17'0"

Inside Length - 10'6"

Overall Beam - 6'11"

Inside Beam - 3'3"

Tube Diameter - 22"

Weight - 340 lbs.

Loading Capacity - 3,590 lbs

No. of Air Chambers - 5 plus air keel

Recommended H.P. - 40 (long shaft)

C. Yamaha 40 hp Motor

Each research boat is powered by a Yamaha Model 40P outboard motor. Specifications for the motor and location of the main components are presented in Figure 2. The motor is bolted to the transom to prevent accidental loss in case of sudden impact or a boat flip.

All frames and other ancillary equipment used in the research boats have been specifically design for purposes of the study. Figures 1 presents the basic layout of equipment in each boat.

V. BOATING EQUIPMENT

This section provides a list of standard boating equipment provided with each boat. Additional tools, repair kits and spare parts will be carried by an OARS support boat for each team.

A. Motor and Running Tank

Each boat is equipped with a 40 hp Yamaha motor, bolted to the transom and a running tank to be filled with unmixed gasoline. Oil used in the fuel-oil mixture is contained in a reservoir under the cowling and is mixed by an oil injection system. This oil reservoir should be checked periodically and generally needs to be refilled after 2-3 6-gallon tanks of fuel.

B. Motor Repair Kit

Each boat carries a motor repair kit at all times while in operation. The kit contains necessary tools and spare parts to perform most minor motor or equipment repairs such as replacing spark plugs. This repair kit is located in the rocket box mounted on the right side of the operators compartment next to the transom (the boat operators seat).

C. Spare Prop and Attachment Hardware

A spare propeller and attachment hardware are kept in each boat while in operation. Attachment hardware and spare prop are kept in the motor repair kit described above.

D. Patch Kit

Each boat carries a patch kit with adequate supplies to make minor repairs to tubes or floors. Major repairs will necessitate the use of a larger repair kit that is kept on OARS support boat.

E. Air Pump

One air pump (foot pump) is carried in each boat and is generally located in the motor repair kit described above.

F. Q-beam Spotlight

Each boat is equipped with two Q-Beam spotlights for use in night operations. These are stored in the rear utility compartment of the frame. The Q-Beams are to be hooked to the battery only during operation. Disconnect the spotlight leads from the battery during storage to prevent battery drain.

G. Battery

Each boat is equipped with one or more 12-volt batteries to be used for operating the Q-Beam and other scientific apparatus. A rectifier used to charge 12-volt batteries has been installed in each Yamaha outboard motor and is located on the transom of each boat. When the battery is not being used to power equipment, it should remain connected to the rectifier so that it will remain charged.

H. Bowline

A bowline is attached to the bow of each boat. This bowline should never be removed from the boat.

VI. PROCEDURES FOR MOTOR STARTUP AND BOAT LAUNCH

The following section provides a general checklist of procedures that will be followed by all BIO/WEST boat operators prior to and during launch of any research boats.

A. Before starting the motor

1. Check air pressure in tubes and keel (3.0 psi), with special attention to the keel and see that valves are clean and sealed with no visible or audible leaks

2. Check for adequate supply of fuel and oil

3. Check motor and prop for damage

4. Make sure all equipment, motor and frames are securely tied

5. Make sure operator compartment is clear

6. Insure that all safety equipment is aboard and accessible

7. Make sure that all passengers are oriented

8. See that all passengers have life jackets that fit properly

9. Check that night lighting is operational

10. Insure that a boating plan has been established and communicated to a B/W or OARS team members.

B. Motor Start Up

1. Transmission in neutral

2. Choke on (for cold start)

3. Fuel line primed

4. Lower unit clear of obstruction

5. Warm up (3 minutes is recommended)

6. Check that water is running from cooling water pilot holes

C. Boat Launch

1. Make sure bow line coiled and stowed

2. Check that running tilt is engaged

3. See that passengers are in secure position

4. Make sure choke is off

5. Use a slow start up

VII. SAFETY EQUIPMENT

The following section presents a list of standard safety equipment provided with each research boat. A complete rescue kit (200 feet of ½" rope, carabiners, pulleys, Jummars ascenders) has also been provided by BIO/WEST for each team and will be transported on the OARS support boat.

A. Spare Life Jacket

A spare life jacket will be carried with all research vessels while operating in whitewater situations.

B. Throw Line

Each boat is equipped with a 65' throw line coiled in a red or yellow nylon bag. This throw line will be mounted in a accessible location in the operators compartment.

C. Throwable Floatation Device

A throwable floating seat cushion is carried in each boat. This seat cushion is generally tied on the rocket box used as a seat by the boat operator.

D. Fire Extinguisher

Each boat is equipped with a B-I type fire extinguisher, carried in the motor repair rocket box or in the rear storage compartment of the frame.

E. First Aid Kit

A first aid kit equipped for minor injuries is carried in each boat and is located in the motor repair box. A major first aid kit for treating more serious injuries is carried on the OARS support boat accompanying each research crew.

F. Spare Paddles

Each research boat is equipped with two spare paddles to enable the operator and passengers to maneuver to safety in case of motor failure.

VIII. DESIGNATION OF BOAT OPERATORS

Operators of research boats fall into three categories including: 1) down river operators; 2) research operators and 3) emergency operators. Designation of BIO/WEST personnel into specific categories will be the responsibility of the Principle Investigator and Project Leaders under advisement of BIO/WEST's Head Boatman. Selection of boat operators will be consistent with guidelines presented in the National Park Service's Colorado River Management Plan or coordination with the River Subdistrict.

A. Down River Operator

Down river operators will be selected on the basis of guidelines set forth by the Colorado River Management Plan or coordination with the River Subdistrict. Personnel designated as down river operators will be authorized to operate research boats in all phases of the Grand Canyon Humpback Chub Study <u>with the exception of electrofishing</u>. This includes operating boats for research activities, as well as downstream navigation of whitewater and upstream navigation of whitewater.

B. Research Operator

Research operators will be authorized to operate boats for routine research activities, with the exception of electrofishing, in flatwater study reaches. Research boat operations will fall into the following two categories:

1. <u>Netting and tracking boats</u>

Research operators will be authorized to operate the Achilles SH-170 to

perform routine research activities in flatwater study reaches. These activities include running nets, performing radio-telemetry tasks and transporting personnel and equipment.

2. <u>Electrofishing boat</u>

Operators of the electrofishing boat while actively shocking fish, will be restricted to personnel that have been specifically trained in proper use and care of the Coffelt Mark XX CPS electrofishing system. Operators of electrofishing boats will be designated by the Principal Investigator and Project Leaders.

C. Situation Operator

All BIO/WEST personnel will be trained in the operation and care of the research boats for purposes of safety and the potential need for any person to become an operator under specific emergency situations. These situations will be defined as any occasion when operation of a boat is necessary for the safety or well being of any person and when an authorized operator is not available.

IX. TRAINING FOR OPERATORS AND PASSENGERS

A. Personnel Responsible for Training

Personnel responsible for training BIO/WEST team members in boat operating procedures include the Head Boatman, Principal Investigator and Project Leaders.

B. Training Procedures

1. <u>All team members</u>

All regular team members will receive an orientation on the use and maintenance of all safety equipment with periodic refreshers and notice of

changes. Volunteers and occasional team members will receive this orientation at the beginning of each trip.

2. **Down river operators**

Down river operators will initially include only Grand Canyon Certified boatmen with adequate sportboat whitewater experience. During the course of the project, the Principal Investigator and Project Leaders, with adequate sportboat experience in whitewater, will be trained by the BIO/WEST Head Boatman or other certified boatmen as to the specific runs or techniques for navigating rapids in the Grand Canyon. Upon completion of training consistent with guidelines presented in the Colorado River Management Plan or as coordinated with the River Subdistrict, the Principle Investigator and Project Leaders will assume the role of down river operators.

3. **Research operators**

Research operators will be trained by down river operators in proper use and maintenance of research boats in dryland and flatwater. The level of training necessary to become a research operator will depend on familiarity with motorized boats and river navigation. Training necessary to become a research operator will be based on the discretion of the Principal Investigator and Project Leaders under advisement of the Head Boatman. Special training by a qualified biologist will be necessary before a person is allowed to operate the electrofishing boat.

4. **Situation operators**

Situation operators will be trained by the Head Boatman.

5. Passengers

All passengers which are employees of BIO/WEST or designated research volunteers will be oriented on use of safety equipment and boat safety protocol.

X. EMERGENCY PROCEDURES

All BIO/WEST personnel will be familiar with emergency procedures in the event of a boating accident or injury. It will be the responsibility of the Project Leader to insure that all members of the research team are familiar with rescue equipment and standard emergency procedures in the event of a boat flip, boat pin, loss of power or someone going overboard.

A. Three Steps To Safety

BIO/WEST advocates a basic, three steps approach for responding to emergency situations. This approach is based on the concept of 'self rescue' or that each person is first responsible for his or her well being in an emergency situation. The three steps for responding to an emergency situation are as follows:

1. Self Rescue

Each person is responsible for his or her own well being in an emergency situation. This begins with proper safety precautions prior to the event of an emergency, i.e. safe behavior on or around boats, always wearing a properly fastened lifejacket when engaged in boating activities and being familiar with safety procedures associated with all possible emergency situations. During an emergency situation the first priority is self rescue, if possible. Failure of a person to secure his own safety and well being before attempting rescue of

others or retrieval of equipment generally leads to an escalation of an emergency rather than its safe resolution.

2. Rescue of Others

Once a person's safety and well being are assured, the next priority in an emergency situation is to determine if others are in need of rescue or emergency help. If a rescue or emergency situation exists, the most experienced person on the scene will be designated as rescue leader to coordinate any rescue attempts or other emergency situations. A boating plan is also an essential element of self rescue and overall safety. A boating plan will be made when ever a research boat leaves camp or support boats.

A boating plan includes the approximate destination and estimated time of return and will be communicated to one or more team members or OARS support personnel before departure.

3. Equipment

Equipment always receives lower priority to people in any emergency situation. Once the safety and well being of all people have been established, attention can then be directed toward retrieval or care of equipment.

B. Incident Reports

Injuries and property damage incurred during any research field trip will be handled as outlined in the Colorado River Management Plan. All minor injuries will be treated in the field if possible. More serious injuries that require a physician's attention will be evacuated in a manner consistent with guidelines presented in the Colorado Management Plan. Accidents resulting in personal injury requiring a physician's attention or more than

$100 of property damage will be reported to Grand Canyon National Park. Incident forms will be used to report all accidents within 7 days following the end of the trip.

XI. EQUIPMENT DAMAGE OR LOSS

Any equipment lost or damaged during research activities should be reported to the Project Leader as soon as possible. This includes damage to propellers and outboard motors, boats or research equipment. Any equipment that is malfunctioning should also be reported to the Project Leader. It will be the Project Leader's responsibility at that point to see that the equipment is either repaired or replaced and that all damaged or malfunctioning equipment is identified to the Equipment Coordinator at the end of each trip.

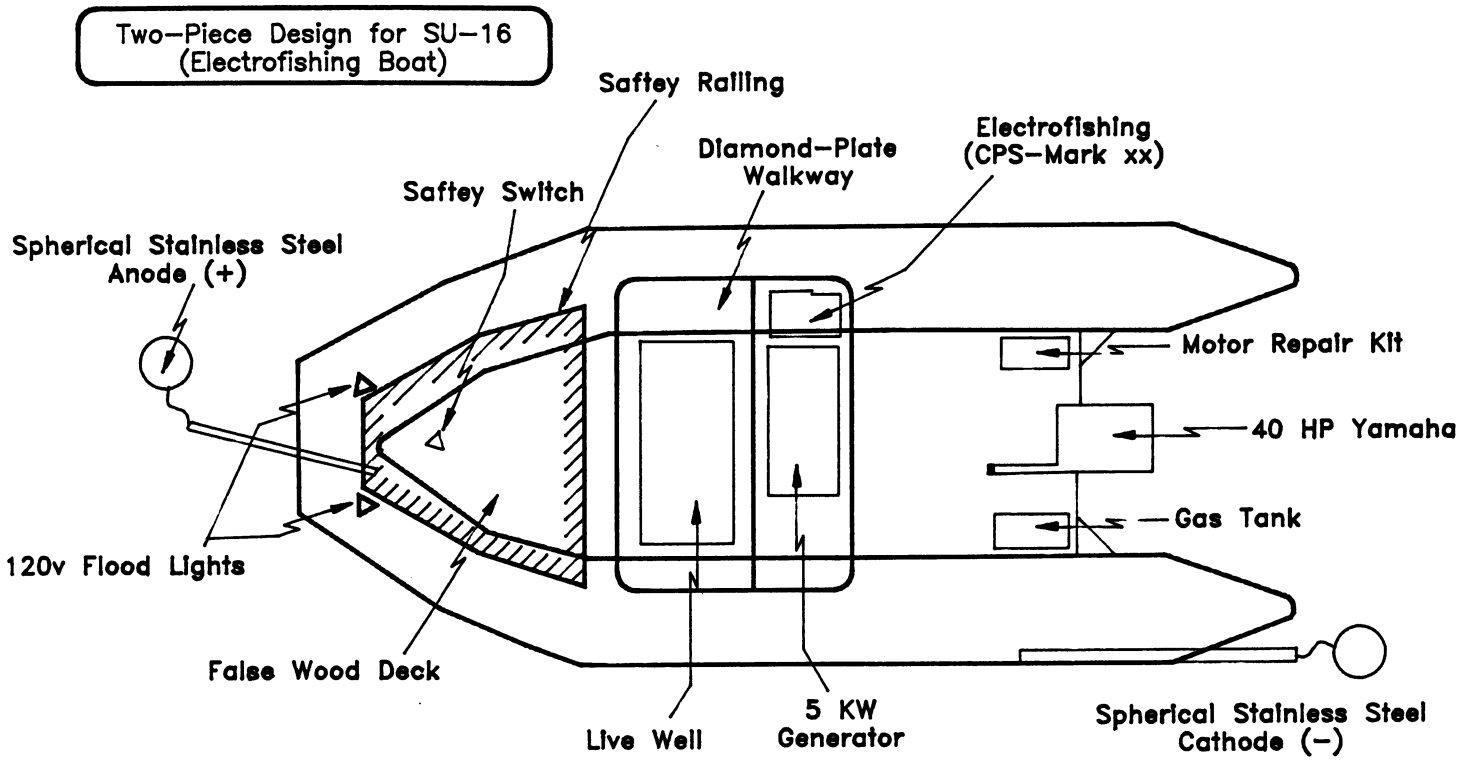

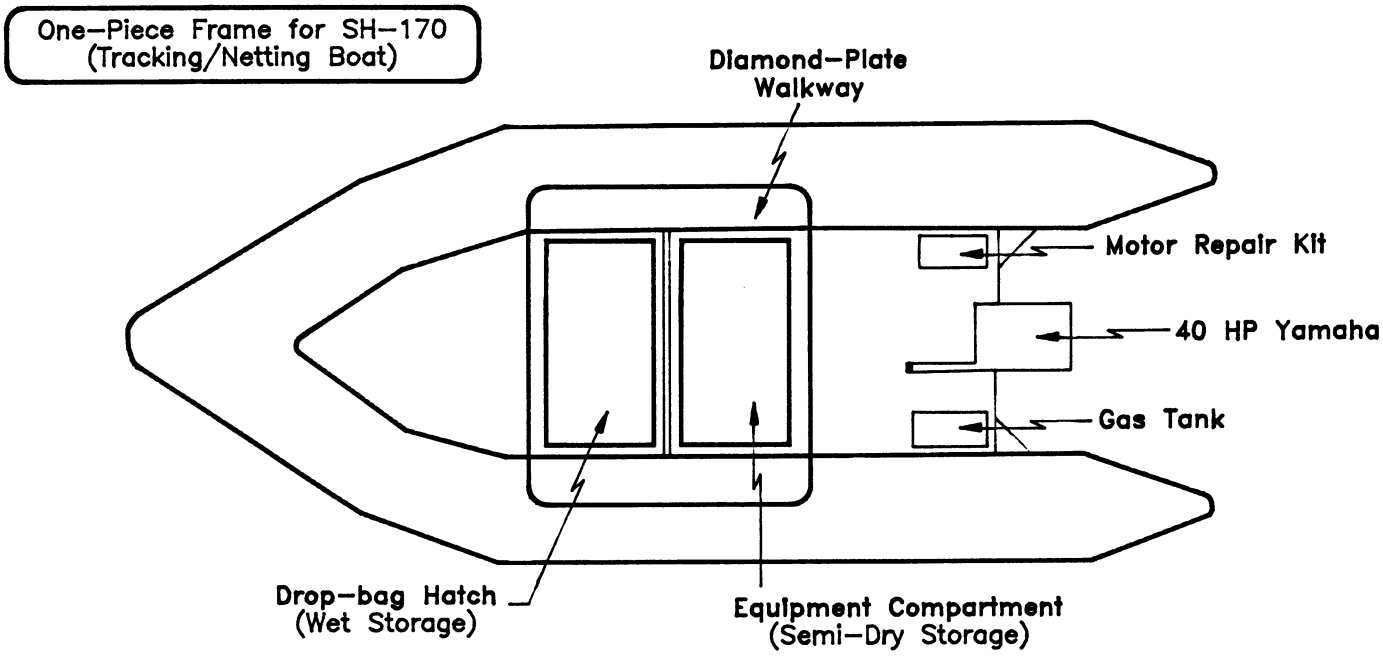

Figure 1. Frame design for BIO/WEST research boats.

Item \ Model	Unit	40P
DIMENSIONS		
•Overall width "A"	mm (in.)	378 (14.9)
•Overall height "B"	mm (in.)	S: 1,203 (47.4) L: 1,324 (52.1)
•Transom height "C"	mm (in.)	S: 394 (15.5) L: 515 (20.3)
•Overall length "D"	mm (in.)	642 (25.3)
•Weight	kg (lb.)	S: 69.0 (151.8) L: 71.0 (156.2)
PERFORMANCE		
•Full throttle operating range	revs/min. (rpm)	4,500 ~ 5,500
•Maximum output	kW (HP)/at rpm.	29.4 (40)/5,000
•Idling speed	revs/min. (rpm)	750 ~ 850
ENGINE		
•Type		Two stroke
•Number of cylinder		3
•Bore and stroke	mm (in.)	67 × 66 (2.64 × 2.60)
•Piston displacement	cm^3 (cu.in.)	698 (42.6)
•Cooling system		Water cooling
•Ignition system		CDI system
•Spark-plug	NGK	B-7HS10
•Spark-plug gap	mm (in.)	0.9 ~ 1.0 (0.035 ~ 0.039)

LOCATION OF MAIN COMPONENTS

40P

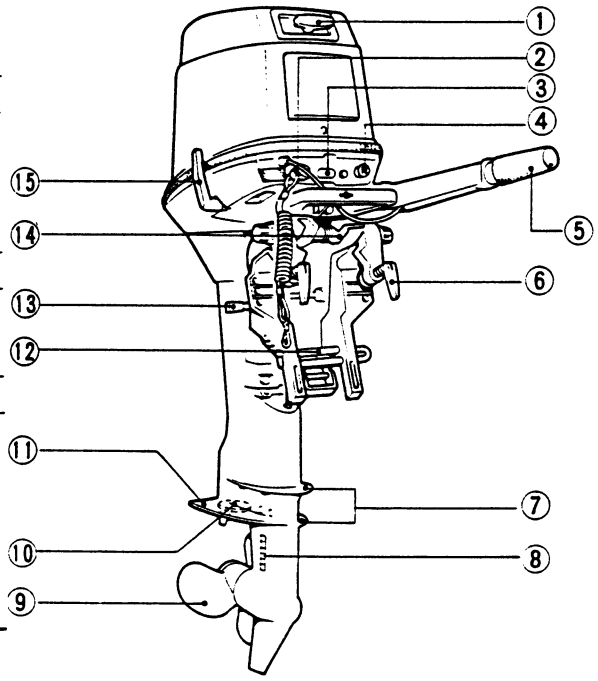

① Recoil starter handle

② Engine stop switch

③ Warning lamp

④ Choke knob

⑤ Throttle-control/steering handle

⑥ Transom-clamp handle

⑦ Anti splash plate

⑧ Water inlet

⑨ Propeller

⑩ Trim tab

⑪ Anti-cavitation plate

⑫ Trim angle adjusting-rod

⑬ Tilt support lever

⑭ Tilt-lock lever

⑮ Gear shift handle

⑯ Oil-level warning lamps

⑰ Battery lead

Figure 2. Yamaha 40P Specs.

Richard - fyi

BIO/WEST, Inc.
1063 West 1400 North
Logan, Utah 84321
(801) 752-4202

MEMORANDUM

July 30, 1991

GLEN CANYON ENVIRONMENTAL STUDIES OFFICE
AUG 05 1991
RECEIVED
FLAGSTAFF, AZ

TO: BIO/WEST Team Members

FROM: Rich Valdez, Principal Investigator

SUBJECT: Boatman Certification, Safety Protocol, Non-Motorized Season, Research Impacts

Thanks to everyone for your great effort and personal sacrifice in keeping the BIO/WEST program in the Grand Canyon going in such a positive manner. I am pleased to see that the quality of data collection has been maintained through some very long and arduous field trips. Thanks to each of you!

We have been approached by GCES and the Park Service to address several issues regarding our research activities in the canyon. I would ask each of you to consider these carefully and cooperate fully so we may go forward with our work.

1. Boatman Certification

Consistent with the terms of our contract with Bureau of Reclamation and our agreement with the National Park Service, BIO/WEST is moving forward in obtaining boatman certifications for all of our personnel operating sportboats in the Grand Canyon. Our goal is that everyone will be certified by December 31, 1991, with the required Advanced First Aid, whitewater experience, and written test. After December 31, 1991, no one will be allowed to operate the sportboats without the certification. Enclosed is a packet that details the requirements and procedures for obtaining certification. The following personnel are currently certified: Bill Leibfried, Glen Doster, Randy VanHaverbeke, Peter Weiss. The following need Advanced First Aid and the written test: Bill Masslich, Tony Wasowicz, Bryan Cowdell, Erika Prats, Helen Yard. Rich Valdez has the first aid and needs to take the written test. In addition to the above personnel, we of course have involved one to four certified guides from the boatman community on each trip and will continue to do so even after the above are certified. Greg Williams is no longer working specifically as a BIO/WEST boatman/biologist, but will continue involvement in the program as an OARS boatman.

Realizing that it is difficult to fit an Advanced First Aid course into our busy schedule, I am in the process of trying to arrange for a course to be taught in Logan in December (no field trip is scheduled for December) and possibly one in Flagstaff as well. Please let me know as soon as possible if you are interested in enrolling in one of these courses. Remember, Advanced First Aid is a requirement for boatman certification.

As I have expressed to everyone before, we are very visible in the Grand Canyon as researchers, and particularly because we are using the sportboats. Safety and courtesy are very important aspects of our work in the canyon. I will remind everyone that we are under the same regulations as certified boatman in the sportboats and will adhere to the following. VIOLATION OF ANY OF THESE WILL RESULT IN SEVERE DISCIPLINARY ACTION OR DISMISSAL.

1. No alcohol will be consumed on the sportboats at any time.
2. The sportboats will not be put on plane in the immediate vicinity of another boat, particularly row rigs.
3. Give the right of way to all downstream traffic during upruns, and make sure the area is clear before uprunning a rapid.
4. Be courteous to all commercial, private, and administrative traffic.
5. In moving camps downstream, the sportboats are to remain within sight of the support boats (37 and 23-footers) at all times as safety backup.
6. There are to be no illegal drugs or substances on the field trips. (Our contract stipulates a "drug-free work place")

Enclosed is a copy of the Grand Canyon River Guides (GCRG) brochure with an application form for joining this group. We work closely with this group in the canyon and I would encourage you to consider joining. BIO/WEST has enrolled in GCRG as a company.

2. Boating Safety and Operations Protocol
A Boating Safety and Operations Protocol has been developed for our activities in the Grand Canyon, and is enclosed. Please read the protocol carefully, and make sure you understand all of the safety considerations. Safety is a very important aspect of this project and we all need to be aware of procedures and precautions when working in the canyon.

3. Non-Motorized Season
The non-motorized season is coming soon, September 15 - December 15. We are in the process of working out an agreement with The Park Service that will minimize the impact of our motorized boats on commercial and private trips. We will let you known as soon as possible how this affects our October and November trips. We do not have a December trip planned.

4. Research Impacts
Please be cognizant at all times of the impact of our research activities on the canyon. GCES and the National Park Service will be establishing a group of professionals to advise on the restoration and mitigation of impacts from research efforts. Our biggest areas of impact are beaches used as camp sites, trails to access sample areas, and trails and location sites for the remote telemetry stations. Please continue to try to minimize our impact in the canyon as much as possible, and keep camp and work areas clean and organized. Please let me know if you have ideas on mitigating some of these impacts.

Mail List: D. Wegner, B. Williams, L. Crist, M. Yard, A. Haden, B. Masslich, B. Leibfried, G. Doster, P. Trinca, B. Cowdell, T. Wasowicz, H. Yard, R. VanHaverbeke, E. Prats, P. Weiss, B. Dierker, G. Williams

BIO/WEST, Inc.

1063 West 1400 North
P.O. Box 3226
Logan, Utah 84321
(801) 752-4202

Art
by
Scott Greenwood