EPHEMERAL GULLY EROSION PROCESS AND MODELING ON THE LOESS PLATEAU OF CHINA

Fen-li Zheng, Prof., State Key Laboratory of Soil Erosion and Dryland Farming on Loess Plateau, Institute of Soil and Water Conservation, CAS and MWR, 26 Xinong Rd. Yangling, Shaanxi, P. R. China, flzh@ms.iswc.ac.cn; Zhong-shan Jiang, Prof., Institute of Soil and Water Conservation, CAS and MWR, 26 Xinong Rd. Yangling, Shaanxi, 712100, P. R. China; Min Wu, Assistant, Northwest A & F University, 22 Xinong Rd. Yangling, Shaanxi, P. R. China

Abstract: In recent 15 years, the large size of runoff plots with area of about 1000 m^2, located at the hilly-gully area of the Loess Plateau, and a dual-box system, consisted of a feeder box located at upslope and a test box located at downslope, have been established to quantify ephemeral gully erosion process and modeling. The results showed that different stages of ephemeral gully development were corresponded to different ephemeral gully headcuts advance, sidewall extension, and deep-cutting. In the earlier stage of ephemeral gully development, ephemeral gully headcuts were very active and played a crux role in sediment detachment; in the middle stage, sidewall extension, especially deep-cutting occupied predominant; and sidewall extension was dominant in the late stages. Sediment regime during ephemeral gully erosion process was always detachment-transport dominated. Upslope runoff discharging into downslope ephemeral gully area caused a great increase of sediment detachments. The net detachments at downslope caused by upslope runoff increased as either slope gradient, rainfall intensity, feeder runoff rate increased, or decreased as sediment concentration in upslope runoff increased. Soil erosion model included ephemeral gully at hillslope scale was developed on the Loess Plateau. The model validation indicated that the model had high-predicted precision for annual soil loss; the differences between the observed and predicted values on hilllospes with or without ephemeral gully erosion were less than 10%.

INTRODUCTION

Ephemeral gully, formed by erosion process and plough activities, are wider and deeper than rills, but they can be tilled across and filled in partially or completely (Zhu, 1956; Hutchinson and Pritchard, 1976). Ephemeral gully erosion causes severe soil loss on steep hillslopes. In the United States, ephemeral gully erosion contributes from 17 % of total soil loss at New York State to 73 % at Washington State (USDA-NRCS, 1977); in the loessial belt of Europe, ephemeral gully erosion contributes at least 10 % of the total soil loss (Robinson et al., 1998). In the hilly-gully region of the Loess Plateau, the ephemeral gully erosion takes up above 46% of total soil loss at steep hillslopes. Therefore, the understanding of ephemeral gully erosion process is important for erosion modeling and controlling.

Recently, WEPP, LISEM or EUROSEM has been applied to many areas in the world. However, due to terrain complexity and great contribution of ephemeral gully and classical gully erosion to sediment delivery from watersheds in China, especially on the Loess Plateau, application of WEPP, LISEM or EUROSEM to China meets great challenges. Therefore, it is necessary to develop a sound erosion prediction model in China according to regional conditions and erosion characteristics. Quantifying erosion process, especially ephemeral gully erosion process is the fundamental basis for development of an erosion prediction model.

This paper briefly introduces current researches of ephemeral gully erosion process and erosion prediction model development on the Loess Plateau of China. Especially, this paper focuses on discussing development of new approaches to study ephemeral gully erosion process and an erosion prediction model, including ephemeral gully at hillslope scale.

THE DEVELOPMENT OF NEW APPROACHES TO STUDY EPHEMERAL GULLY EROSION PROCESS

The Establishment of Natural Field Plots to Study Ephemeral Gully Erosion Process: The establishments of field plots, which covered the entire ephemeral gully catachment with are of 580-1144 m^2, were used to monitory ephemeral gully erosion process. Meanwhile, the field runoff plots without ephemeral gully were also established in order to identify the contribution of ephemeral gully erosion to sediment delivery (Zheng et al., 1998). Eight runoff plots were established at hillslopes in both regions of Ansai and Ziwuling, located at the hilly-gully regions on the Loess Plateau (Table 1).

Table 1 Establishment of natural runoff plots of ephemeral gully erosion.

Plot No.	Regions	With/without ephemeral gully (EG)	Length m	Width m	Area m^2	Slope gradient °
1	Ziwuling	Without EG	40.4	5.0	202	5-12
2		Without EG	40.8	5	203	5-12
3		With EG	86.3	13.6	995.2	5-32
4		With EG	99.2	13.8	1144.3	5-32
5	Ansai	Without EG	24	5.0	108	3-22
6		Without EG	25	5.0	112	3-22
7		With EG	50.2	12.6	580	3-30
8		With EG	49.5	12.6	576	3-30

The data from the field runoff plots showed that soil loss on the hillslopes with ephemeral gully erosion rates reached 10,000 to 12,000 t km^{-2} yr^{-1} and soil losses on the hillslopes without ephemeral gully were 5,000 to 6,800 t km^{-2} yr^{-1} (Table 2).

Table 2 Total soil loss, rill erosion and ephemeral gully erosion from the field plots.

Plot No.	Regions	With/without ephemeral gully (EG)	Total soil loss t km^{-2} yr^{-1}	Rill erosion (RE) t km^{-2} yr^{-1}	RE as percentage of total soil loss %	Ephemeral gully erosion (EGE) t km^{-2} yr^{-1}	EGE as a percentage of total soil loss %
1	Ziwuling	Without EG	6775	5311	78.4	0	0
2		Without EG	6859	5542	80.7	0	0
3		With EG	10448	2200	21.1	7200	68.9
4		With EG	10371	2400	23.1	7400	71.4
5	Ansai	Without EG	5148	3594	69.8	0	0
6		Without EG	5400	3910	72.4	0	0
7		With EG	11136	2138	20.8	7816	70.2
8		With EG	12048	2916	24.2	7976	66.2

The data in Table 2 showed that soil losses on the hillslopes with ephemeral gully were 1.51 to 2.34 times great than those on the hillslopes without ephemeral gully erosion. Moreover, the measured data of ephemeral gully erosion indicated that ephemeral gully erosion accounted for 66.2% to 71.4% of the total soil loss, indicating that ephemeral gully erosion had a great contribution to total soil loss. Soil erosion status on the hillslopes with and without ephemeral gully erosion demonstrated in Figure 1 and Figure 2. These two figures can simply identify soil erosion severity on the hilllsopes with and without ephemeral gully erosion.

Figure 1 Soil erosion status on the hillslope with ephemeral gully erosion

Figure 2 Soil loss status on the hillslope without ephemeral gully erosion

<u>Design of A Dual-Box System to Study Ephemeral Gully Erosion Process and Sediment Regimes:</u> For erosion studies, the traditional single-sized plot only produces total sediment delivery. Recently, we have developed a dual-box system, consisted of a feeder box located at upslope section and a test box with a miniature model of ephemeral gully shape located at downslope section to identify sediment detachment or deposition along the runoff route (Figure 3).

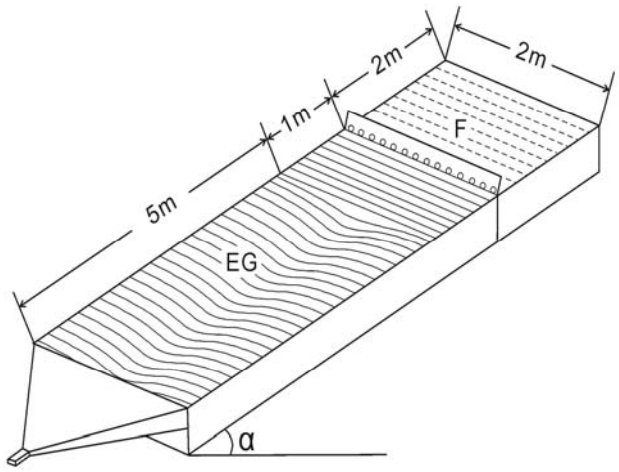

Figure 3 Schematic diagram of the dual-box system for stuffy ephemeral gully erosion (F is the feeder box; EG is the test box of ephemeral gully erosion)

The dual-box system was used to study the effects of run-on water and sediment on downslope ephemeral gully erosion process under different conditions. The experimental treatments included three slope degree of 26.8%, 36.4% and 46.6%, three rainfall intensities of 50, 75, 100 mm h-1, and six feeder runoff rates of 2, 4, 8, 12 and 16 L/min. The researched results demonstrated that sediment regimes were detachment-transport dominated on the hillslopes with ephemeral gully erosion. The upslope runoff always caused the net sediment delivery and the net sediment detachment at the downslope ephemeral gully area caused by the upslope runoff increased with a decrease of sediment concentration in upslope runoff or an increase of rainfall intensity, slope gradient or feeder runoff rate. The ephemeral gully erosion accounted for 52 % to 72.8 % of the total soil loss. These results showed the importance of understanding ephemeral gully erosion process.

EPHEMERAL GULLY EROSION PROCESS

The miniature model of ephemeral gully shape at initial stage was made to quantify the developing process of ephemeral gully, including ephemeral gully headcuts advance, sidewall extension and deep-cutting for the three rainfall intensities of 50, 75, 100 mm h^{-1}, the three slope gradients of 26.8%, 36.4% and 46.6%, and the six feeder runoff rates of 2, 4, 8, 12 and 16 L/min. In order to observe complete development of ephemeral gully, *i.e.,* the ephemeral gully experienced from the earlier stage (active stage), middle stage to late stage (stable stage), two to four continuous runs were made for each experimental treatment. For each treatment, after the first run was made, the soil box was set overnight, and then the second run was made on the eroded surface conditions formed by the first run. The same procedure was performed for the third and fourth run.

The experimental data showed that different stages of ephemeral gully development were corresponded to different ephemeral gully erosion process, *i.e.,* ephemeral gully headcuts advance, sidewall extension, and deep-cutting. Meanwhile, as rainfall intensity, slope gradient, and feeder runoff rates increased, the speeds of sidewall extension and deep-cutting, especially gully headcuts advance increased. For example, for the treatment of 100 mm $h^{-1}$of rainfall and 46.6% of slope degree, two continuous runs were made for the complete development of ephemeral gully. But for the treatment of 50 mm $h^{-1}$of rainfall and 26.8% of slope degree, four continuous runs were made for the complete development of ephemeral gully. Here the treatment of 50 mm $h^{-1}$of rainfall and 26.8% of slope degree was taken as an example for demonstrating the complete development of ephemeral gully.

The first run demonstrated that the ephemeral gully headcuts advance was fast (Table 3). The ephemeral gully length shifted from 315 cm at 9 min to 500 cm at 19 min of run duration. The speed of the headcuts advance was 11.1 m h^{-1}. After 19 min of run duration, the headcuts advance became slow and the speed of headcuts advance was 1.26 m h^{-1} from 19 min to 47 min of run duration. Meanwhile, the ephemeral gully sidewall extension and deep cutting were also active. For example, the ephemeral gully width changed from 8 cm at 12 min to 14.6 cm at 43 min of run duration and the ephemeral gully depth shifted from 5.6 cm at 12 min to 17.2 cm at 43 min of run duration; the speeds of sidewall extension and deep-cutting were was 0.13 m $h^{-1}$and 0.22 m h^{-1}, respectively. These results indicated that the development of ephemeral gully took place in the active stage and the headcuts advance and deep-cutting played a crux role to the sediment delivery.

The second run showed that the headcuts advance was very slow (Table 3). The speed of the headcuts advance was only 0.01m h^{-1}. But the sidewall extension was fast. The ephemeral gully width changed from 14.8 cm at 7 min to 30.6 cm at 56 min of run duration and the speed of the sidewall extension was 0.21, which was 1.6 times than that in the first run. Meanwhile, the deep-cutting was still active. The ephemeral gully depth shifted from 14.2 cm at 7 min to 23.6 cm at 23 min of run duration, and the speeds of the deep-cutting was 0.46 m h^{-1}, which was 2 times than that in the first run. After 23 min of run duration, the gully depth became shallow due to temporary sediment deposition in the ephemeral gully channels due to the active sidewall extension. These results indicated that the sidewall extension, especially deep-cutting were predominant in the sediment delivery and the development of ephemeral gully was still active during the secondary run.

Table 3 Average ephemeral gully length, width and depth during the each run.

The first run										
Run duration, min	9	12	19	24.5	31	36	43	47	53	59
Ephemeral gully length, cm	315	460	500	520	525	535	540	580	580	580
Ephemeral gully width, cm	-	8.0	8.6	9.7	11.0	13.8	14.6	14.6	14.6	14.6
Ephemeral gully depth, cm	-	5.6	5.8	7.0	11.8	16.0	16.3	16.8	16.9	17.0
The second run										
Run duration, min	7	15	19	23	28	35	42	46	52	56
Ephemeral gully length, cm	58.9	59.2	59.4	59.5	59.6	59.6	59.7	59.8	59.9	60.0
Ephemeral gully width, cm	14.8	15.1	15.3	15.6	21.4	22.4	25.2	26.2	30.4	30.6
Ephemeral gully depth, cm	18.4	22.1	23.2	23.6	18.4	19.8	19.2	18.4	19.6	20.4
The third run										
Run duration, min	8	14	19	23	30	34	40	45	51	56
Ephemeral gully width, cm	30.0	30.2	30.6	30	33.8	34.4	34.4	34.5	34.6	35.0
Ephemeral gully depth, cm	21.4	25.6	26.2	26.2	24.8	26.6	26.2	25.7	24.9	25.3
The fourth run										
Run duration, min	8	13	19	24.5	29	35	41	47	55	59
Ephemeral gully width, cm	36.6	36.8	36.8	36.8	37.0	37.2	40.6	41.0	42.4	42.6
Ephemeral gully depth, cm	25.7	26.1	26.3	25.8	25.6	26.2	25.6	25.8	25.6	25.8

In the end of the second run, the ephemeral gully head reached the top of the test box, the ephemeral gully headcuts advance ceased. This was similar to the filed phenomenon that the ephemeral gully head reached the watershed boundary (Zheng et al., 1998).

The third run showed that the speeds of the sidewall extension and deep-cutting were lesser than those in the second run (Table 3). The ephemeral gully width shifted from 30 cm at 8 min to 35 cm at 56 min of run duration, the speeds of the sidewall extension was 0.06 m h^{-1}, which was much smaller than that in the second run. The ephemeral gully depth shifted from 21.4 cm at 8 min to 25.3cm at 56 min of run duration, the speeds of the deep-cutting was 0.05 m h^{-1}, which was much smaller than that in the second run. These results showed that ephemeral gully development was relative stable.

The fourth run demonstrated that the speed of the sidewall extension was similar to the third run (Table 3). The ephemeral gully width shifted from 25.4 cm at 8 min to 42.6cm at 59 min of run duration, the speeds of the sidewall extension was 0.07 m h^{-1}. The ephemeral gully depth almost maintained constant. These results showed that ephemeral gully development took place in the stable state and the sidewall extension played a key role in the sediment delivery.

The measured data of ephemeral gully erosion for the four-times continuous runs indicated that gully erosion accounted for 48.5% to 70.2% of total soil loss (Table 4). These results were the same as we got from field study (Zheng *et al*., 1998), indicating that ephemeral gully erosion plays an important role at steep hillslopes of the Loess Plateau. Therefore, soil erosion model on the Loess Plateau should cover ephemeral gully erosion.

Table 4 Ephemeral gully erosion as percentage of soil loss.

The four-continuous runs	Soil loss kg	Ephemeral gully erosion kg	Ephemeral gully as percentage of soil loss %
The first run	108.7	64.4	59.2
The second run	169.1	118.8	70.2
The third run	138.6	76.8	55.4
The fourth run	103.4	50.2	48.5

EROSION PREDICTION MODEL AT HILLSLOPE SCALE

In recent years, soil erosion model included ephemeral gully at hillslope scale has been developed on the Loess Plateau.

The Structure of Erosion Prediction Model: The structure of erosion prediction model is as follows:

$$A=RKLSGCP \tag{1}$$

Where A is annual soil loss (t ha^{-1} yr^{-1}) ; R is rainfall erosivity (MJ mm $ha^{-1}h^{-1}$ yr^{-1}) ; K is soil erodibility (t h MJ^{-1} mm^{-1}) ; L and S are slope gradient factor and slope length factor, respectively ; G is ephemeral gully erosion factor; C is crop cover and management (dimensionless); P is soil conservation measure factor.

Calculation of Each Factor:

Definition of the Standard Runoff Plot in China: The standard runoff plot in China is referred to as a runoff plot with 10°of slope degree, 20 m of slope length, 5 m of slope width, and continuous bare and fallow during the observation period.

Rainfall Erosivity (*R*): The formula for calculating R is as follows:

$$R_c = 16.4\left(\frac{P_c I_{60}}{100}\right)^{0.953} \tag{2}$$

Where R_c is rainfall erosivity in the certain year (MJ·mm ha^{-1} h^{-1} yr^{-1}) ; P_c is the yearly accumulative total of single rainfall amount equal or over 10 mm in the corresponding year (mm); I_{60} is maximum 60-min rainfall intensity selected from each single rainfall event in the corresponding year (mm h^{-1}).

Slope Length and Gradient Factors (*LS*): The formula for calculating *LS* is as follows:

$$LS = (\frac{\lambda}{20})^m (\frac{\theta}{10})^n \tag{3}$$

Where λ and θ are slope length (m) and slope degree (º), respectively ; m and n are slope length exponent and slope degree exponent, respectively.

The equation for calculating m is $m = 0.029 S_0^{\ 0.69}$, where S_0 is slope degree (º)

The value of n is between 1.3 and 1.40, and the value of 1.35 is recommended.

Ephemeral Gully Erosion Factor (*G*): For slope gradient over 15ºand given rainfall data, the equation for calculating G is as follows:

$$G = 1 + \left(\frac{\theta - 15}{15} \right) \left[3.156 (\Sigma P I_{30})^{-0.167} - 1 \right] \tag{4}$$

Where θ is slope degree (º); P is the yearly accumulative total of single rainfall amount over 3 mm in the certain year (mm); I_{30} is maximum 30-min rainfall intensity selected from single rainfall event in the corresponding year (mm h^{-1}).

For slope gradient over 15ºand no rainfall data, the equation for calculating G is as follows:

$$G = 1 + 1.60 \sin\left(\theta - 15^\circ\right) \tag{5}$$

For the slope gradient less than or equal 15º, the equation for calculating G is as follows:

$$G = 1 + 1.20 (\sin\theta)^{0.5} \tag{6}$$

***K, C,* and *P* Factors:** K, C, and P factors were obtained from field observation and simulated rainfall experiments or were referred to as the data of USLE.

<u>Validation of The Erosion Prediction Model:</u> The data from the field runoff plots observed from 1991 to1998 were used to validate the erosion model. The results showed that predicted values were very close to the observed values (Figure 4). On the hillslopes with ephemeral gully erosion, the differences between predicted and observed values were less than 9.0%. The results indicate that the erosion model has high-predicted precision for annual soil loss.

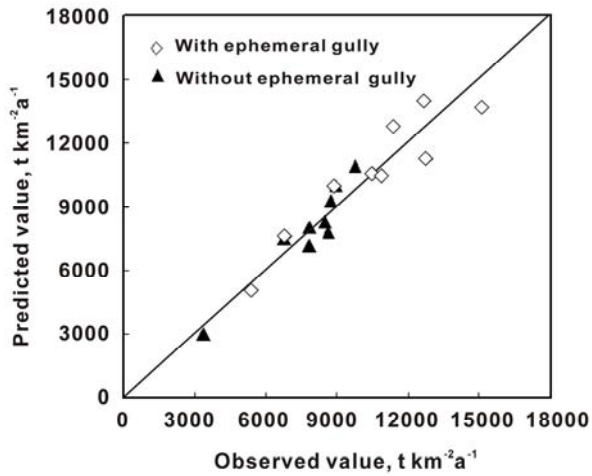

Figure 4 Comparison of the predicted values with the observed values on the hillslopes with and without ephemeral gully Erosion.

CONCLUSIONS

This paper presents the development of new approaches to study ephemeral gully erosion process and the erosion prediction model including ephemeral gully at hillslope scale. The following conclusions were derived:

The large size of runoff plots with area of about 1000 m^2, located at the hilly-gully area of the Loess Plateau were established on the Loess plateau to monitory ephemeral gully erosion process; and the dual-box system, consisted of a feeder box located at upslope section and a test box with a miniature model of ephemeral gully shape located at downslope section, was developed to quantify ephemeral gully erosion process.

Sediment regime during ephemeral gully erosion process was detachment-transport dominated. Soil losses on the hilllsopes with ephemeral gully erosion were 10,000 to 12,000 t km^{-2} yr^{-1}, which were 1.51 to 2.34 times great than those on the hillslopes without ephemeral gully erosion. The ephemeral gully erosion accounted for 48.5 to 72.8% of the total soil loss.

Upslope runoff discharging into downslope ephemeral gully area always caused the net sediment delivery in the downslope ephemeral gully section. The net detachments at the downslope ephemeral gully erosion area caused by upslope runoff increased as either slope gradient, rainfall intensity or feeder runoff rate increased, or decreased as sediment concentration in upslope runoff increased.

The development of ephemeral gully showed that the ephemeral gully headcuts played a crux role in sediment detachment in the earlier stage; in the middle stage, the sidewall extension, especially the deep-cutting occupied predominant; in the late stage, the sidewall extension were dominant.

Soil erosion model included ephemeral gully at hillslope scale was developed on the Loess Plateau. The results showed that predicted values were very close to the observed values. On

the hillslopes with and without ephemeral gully erosion, the differences between predicted and observed values were less than 10%, indicating that the model was suitable for the steep landscapes.

ACKNOWLEDGMENTS

This study was funded by CAS project (KZCX3-SW-422) and National Nature Science Foundation of China (40335050, 50239080).

REFERENCES

Hutchinson, D. E. and Pritchard H. W. (for Committee). (1976). "Resource conservation glossary," Journal of Soil and Water Conservation. 31(4):1-63.

Robinson, K. M., Bennett, S. J., and Casali, J. (1998). "Headcut dynamics and ephemeral gully erosion," ASAE Annual International Meeting, Orlando, Florida, USA, July 12-16, American Society of Agricultural Engineering, St Joseph, USA.

USDA-NRCS. (1977). "America's private land, a geography of hope," USDA-NRCS, Washington, D. C.

Zheng, F. and Kang, S. (1998). "Erosion and sediment yield in different erosion zone of the Loess Plateau," ACTA Geographica Sinica. 53(5):422-428 (in Chinese).

Zhu, X. (1956). "Soil erosion classification at the loessial region," ACTA Pedological Sinica. 4(2): 99-115 (in Chinese).