ORIGINAL

United States Department of the Interior

BUREAU OF RECLAMATION
DENVER OFFICE
PO Box 25007
Building 67, Denver Federal Center
Denver, Colorado 80225-0007

RECEIVED BOR SLCU
OFFICIAL FILE COPY
AUG 2 3 1994
Class RES-3.20
Prj GC
Cntr # 94021027
Fldr # 30901
Kywd
Date | Initials | To
1521

IN REPLY REFER TO:

D-3743A
RES-2.00

AUG 19 1994

MEMORANDUM

GCES OFFICE COPY
DO NOT REMOVE!

To: Regional Director, Salt Lake City, UT
Attention: UC-1521 (Vernieu)

From: Margaret Lake
Acting Manager, Environmental Research Chemistry Laboratory

Subject: Report of Chemical Analyses of Water Samples Collected from Glen Canyon Dam - Memorial Day Steady Flow Samples - Glen Canyon Environmental Studies, Arizona (Water Samples)

Attached are nutrient and major ions analyses data for water samples submitted to our laboratory on June 14, and July 12, 1994. The samples were received in good condition.

All data meet laboratory quality standards. The holding time for TKN was missed for samples H-5645 through H-5650. All other holding times were met. Please advise us if you have any problems with our performance on blind QA samples you may have submitted.

If you have any questions regarding this report, please call (303) 236-4290 to contact your project representative, Barb Frost, extension 260, our Quality Control Officer, Doug Craft, extension 255, or Margaret Lake, extension 256.

Margaret A. Lake

Attachment

cc: Glen Canyon Environmental Studies, PO Box 22459, Flagstaff AZ 86002, Attention: (Hueftle) (w/attchment)

452.00
RES-3.20
G558
21589

NOTICE. IF YOU DETACH ENCLOSURES, PLEASE INSERT

CE NO. _____

(wdp p900-dta 940819) (T2)

RECEIVED
AUG 25 1994

```
*****************************************************************************
                          SAMPLE LOG-IN SUMMARY
                        USBR CHEMISTRY LABORATORY
                             DENVER, COLORADO
*****************************************************************************

    BATCH NUMBER........... 128
    DATA disk file name....UC5642
=============================================================================
    Type of samples........water
    Submitted by...........UC-1521 (Vernieu)
    Number of samples......3
    Chem lab numbers.......H- 5642 to 5644
    Sampling date..........06/08/1994
    Requested analyses.....ions
      ion code(s)..........1
    Region of origin.......UC
    Project................Colorado River below Glen Canyon Dam
    Feature................unfiltered/filtered/unacidified
=============================================================================
    Recall number..........GCDXO
    DUE DATE...............07/12/1994
    PRIORITY...............Medium
=============================================================================

                              SAMPLE IDENTIFIERS

SAMPLE  1 H-5642  #1 SCCR0000 Lees Ferry 0900
SAMPLE  2 H-5643  #4 SCCR-145 CRBD 1200
SAMPLE  3 H-5644  #5 SCCR-145 CRBD 1200
=============================================================================
```

USBR CHEMISTRY LABORATORY
REPORT OF MAJOR CATION AND ANION ANALYSES
07/11/1994

PROJECT..... Colorado River below Glen Canyon Dam
SAMPLING DATE..... 06/08/1994

H- 5642 #1 SCCR0000 Lees Ferry 0900

pH			8.00E+000
Conductivity			8.74E+002 uS/cm @ 25C
Suspended solids			<4 E+000 mg/L
Dissolved solids-180C			5.42E+002 mg/L
Sum of cations+anions			5.81E+002 mg/L
Calcium	3.22E+000	meq/L	6.46E+001 mg/L
Magnesium	1.91E+000	meq/L	2.32E+001 mg/L
Sodium	2.93E+000	meq/L	6.73E+001 mg/L
Potassium	9.71E-002	meq/L	3.80E+000 mg/L
Carbonate	0.00E+000	meq/L	0.00E+000 mg/L
Bicarbonate	2.70E+000	meq/L	1.65E+002 mg/L
Sulfate	4.35E+000	meq/L	2.09E+002 mg/L
Chloride	1.36E+000	meq/L	4.83E+001 mg/L

H- 5643 #4 SCCR-145 CRBD 1200

pH			8.12E+000
Conductivity			8.74E+002 uS/cm @ 25C
Suspended solids			<4 E+000 mg/L
Dissolved solids-180C			5.51E+002 mg/L
Sum of cations+anions			5.94E+002 mg/L
Calcium	3.31E+000	meq/L	6.63E+001 mg/L
Magnesium	1.95E+000	meq/L	2.37E+001 mg/L
Sodium	3.00E+000	meq/L	6.91E+001 mg/L
Potassium	1.05E-001	meq/L	4.10E+000 mg/L
Carbonate	0.00E+000	meq/L	0.00E+000 mg/L
Bicarbonate	2.75E+000	meq/L	1.68E+002 mg/L
Sulfate	4.43E+000	meq/L	2.13E+002 mg/L
Chloride	1.42E+000	meq/L	5.03E+001 mg/L

H- 5644 #5 SCCR-145 CRBD 1200

pH			8.12E+000
Conductivity			8.88E+002 uS/cm @ 25C
Suspended solids			<4 E+000 mg/L
Dissolved solids-180C			5.60E+002 mg/L
Sum of cations+anions			5.89E+002 mg/L
Calcium	3.21E+000	meq/L	6.44E+001 mg/L
Magnesium	1.91E+000	meq/L	2.32E+001 mg/L
Sodium	2.94E+000	meq/L	6.75E+001 mg/L
Potassium	1.08E-001	meq/L	4.21E+000 mg/L
Carbonate	0.00E+000	meq/L	0.00E+000 mg/L
Bicarbonate	2.73E+000	meq/L	1.66E+002 mg/L
Sulfate	4.42E+000	meq/L	2.13E+002 mg/L
Chloride	1.42E+000	meq/L	5.04E+001 mg/L

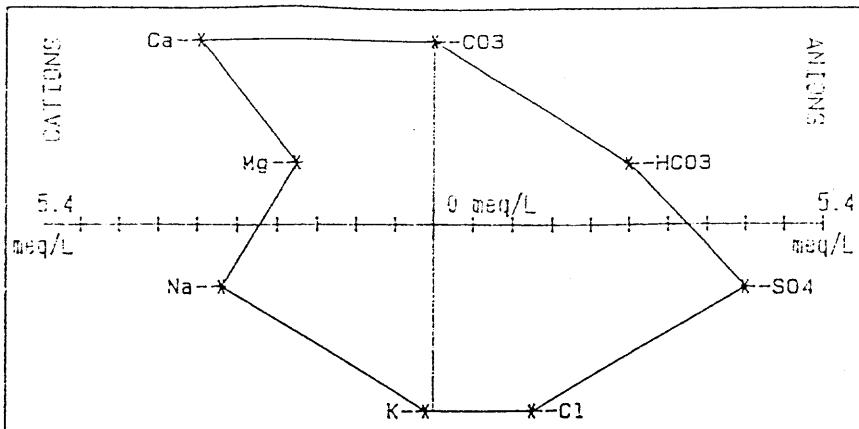

#1 SCCR0000 Lees Ferry 0900

H-5642
06/08/94

EC (uS/cm)	874
pH.....	8.00
TDS (mg/L)	542
TSS (mg/L)	<4
Sum (mg/L)	581

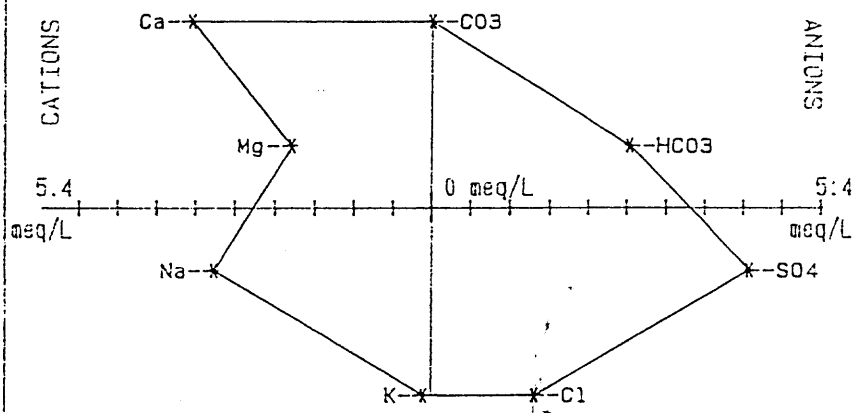

#4 SCCR-145 CRBD 1200

H-5643
06/08/94

EC (uS/cm)	874
pH.....	8.12
TDS (mg/L)	551
TSS (mg/L)	<4
Sum (mg/L)	594

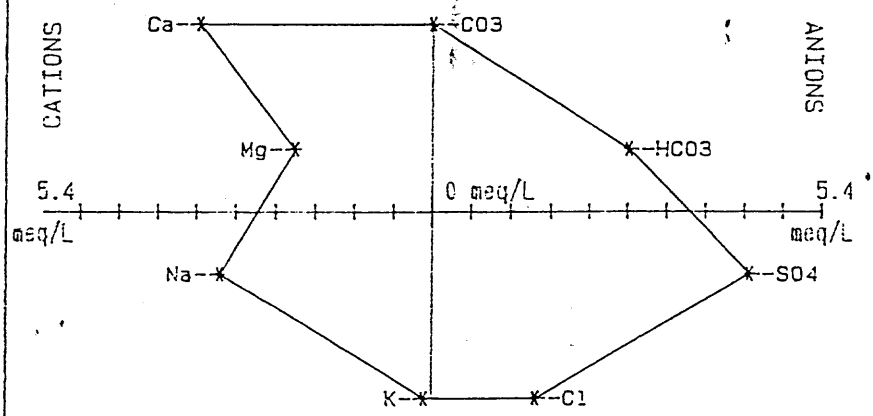

#5 SCCR-145 CRBD 1200

H-5644
06/08/94

EC (uS/cm)	888
pH.....	8.12
TDS (mg/L)	560
TSS (mg/L)	<4
Sum (mg/L)	589

****

SAMPLE LOG-IN SUMMARY
USBR CHEMISTRY LABORATORY
DENVER, COLORADO

****

BATCH NUMBER..... 143
DATA disk file name....UC5704

==========

Type of samples.....water
Submitted by.....UC-1521 (Vernieu)
Number of samples.....2
Chem lab numbers.....H- 5704 to 5705
Sampling date.....07/08/1994
Requested analyses.....ions
ion code(s).....1
Region of origin.....UC
Project.....Colorado River below Glen Canyon Dam
Feature.....unfiltered/filtered/unacidified

==========

Recall number.....GCDXO
DUE DATE.....08/09/1994
PRIORITY.....Medium

==========

SAMPLE IDENTIFIERS

SAMPLE 1 H-5704 CRBD SCGC-145 Colo. R. below Glen Canyon Dam 1500
SAMPLE 2 H-5705 CRLF SCGC0000 Colo. R. @ Lees Ferry 1800

==========

USBR CHEMISTRY LABORATORY
REPORT OF MAJOR CATION AND ANION ANALYSES
08/12/1994

PROJECT..... Colorado River below Glen Canyon Dam
SAMPLING DATE..... 07/08/1994

H- 5704 CRBD SCGC-145 Colo. R. below Glen Canyon Dam 1500

pH			7.87E+000
Conductivity			9.45E+002 uS/cm @ 25C
Suspended solids			<4E+000 mg/L
Dissolved solids-180C			5.83E+002 mg/L
Sum of cations+anions			5.62E+002 mg/L
Calcium	3.20E+000	meq/L	6.40E+001 mg/L
Magnesium	1.87E+000	meq/L	2.27E+001 mg/L
Sodium	2.85E+000	meq/L	6.55E+001 mg/L
Potassium	7.01E-002	meq/L	2.74E+000 mg/L
Carbonate	0.00E+000	meq/L	0.00E+000 mg/L
Bicarbonate	2.63E+000	meq/L	1.61E+002 mg/L
Sulfate	4.19E+000	meq/L	2.01E+002 mg/L
Chloride	1.27E+000	meq/L	4.50E+001 mg/L

H- 5705 CRLF SCGC0000 Colo. R. @ Lees Ferry 1800

pH			8.00E+000
Conductivity			9.45E+002 uS/cm @ 25C
Suspended solids			<4E+000 mg/L
Dissolved solids-180C			5.26E+002 mg/L
Sum of cations+anions			5.65E+002 mg/L
Calcium	3.26E+000	meq/L	6.53E+001 mg/L
Magnesium	1.88E+000	meq/L	2.29E+001 mg/L
Sodium	2.87E+000	meq/L	6.60E+001 mg/L
Potassium	7.02E-002	meq/L	2.74E+000 mg/L
Carbonate	0.00E+000	meq/L	0.00E+000 mg/L
Bicarbonate	2.64E+000	meq/L	1.61E+002 mg/L
Sulfate	4.20E+000	meq/L	2.02E+002 mg/L
Chloride	1.28E+000	meq/L	4.52E+001 mg/L

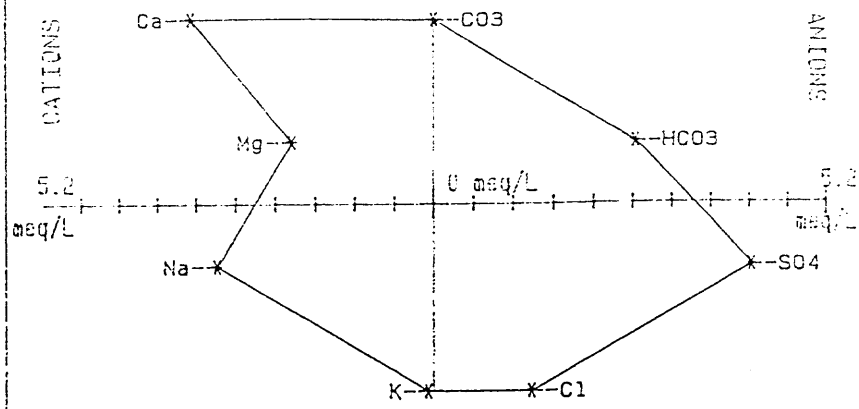

CR3D SCGC-145 Colo. R. below Glen Canyon Dam 1500

H-5704
07/08/94

EC (uS/cm)	945
pH.....	7.87
TDS (mg/L)	583
TSS (mg/L)	<4
Sum (mg/L)	562

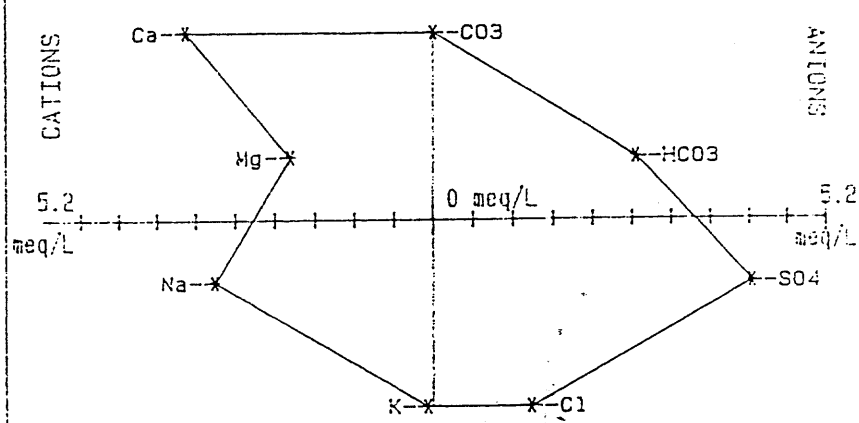

CRLF SCGC0000 Colo. R. @ Lees Ferry 1800

H-5705
07/08/94

EC (uS/cm)	945
pH.....	8.00
TDS (mg/L)	526
TSS (mg/L)	<4
Sum (mg/L)	565

```
*****************************************************************************
                          SAMPLE LOG-IN SUMMARY
                        USBR CHEMISTRY LABORATORY
                             DENVER, COLORADO
*****************************************************************************

    BATCH NUMBER........... 129
    DATA disk file name....UC5645
=============================================================================
    Type of samples........water
    Submitted by...........UC-1521 (Vernieu)
    Number of samples......6
    Chem lab numbers.......H- 5645 to 5650
    Sampling date..........06/08/1994
    Requested analyses.....N-P
      nutrient code(s).....0
    Region of origin.......UC
    Project................Colorado River below Glen Canyon Dam
    Feature................unfiltered/filtered/acidified
=============================================================================
    Recall number..........GCDXO
    DUE DATE...............07/12/1994
    PRIORITY...............Medium
=============================================================================

                              SAMPLE IDENTIFIERS

SAMPLE  1 H-5645  #1 SCCR0000 Lees Ferry 0900
SAMPLE  2 H-5646  #2 SCCR0000 Lees Ferry 0900 spike
SAMPLE  3 H-5647  #3 SCCR0000 Lees Ferry 0900 duplicate
SAMPLE  4 H-5648  #4 SCCR-145 CRBD 1200
SAMPLE  5 H-5649  #5 SCCR-145 CRBD 1200 duplicate
SAMPLE  6 H-5650  #6 SCCR-145 CRBD 1200 spike (overfilled by 1 mL)
=============================================================================
```

****

SAMPLE LOG-IN SUMMARY
USBR CHEMISTRY LABORATORY
DENVER, COLORADO

****

BATCH NUMBER..... 144
DATA disk file name....UC5706

==========

Type of samples.....water
Submitted by.....UC-1521 (Vernieu)
Number of samples.....7
Chem lab numbers.....H- 5706 to 5712
Sampling date.....07/08/1994
Requested analyses.....N-P
nutrient code(s).....0
Region of origin.....UC
Project.....Colorado River below Glen Canyon Dam
Feature.....filtered/unfiltered/acidified

==========

Recall number.....GCDXO
DUE DATE.....08/09/1994
PRIORITY.....Medium

==========

SAMPLE IDENTIFIERS

SAMPLE 1 H-5706 CRBD Colo. R. below Glen Canyon Dam SCGC-145 1500
SAMPLE 2 H-5707 CRBD!1 Colo. R. below Glen Canyon Dam SCGC-145 1500
SAMPLE 3 H-5708 CRBD!2 Colo. R. below Glen Canyon Dam SCGC-145 1500
SAMPLE 4 H-5709 CRLF Colo. R. @ Lees Ferry SCGC0000 1800
SAMPLE 5 H-5710 CRLF!1 Colo. R. @ Lees Ferry SCGC0000 1800
SAMPLE 6 H-5711 CRLF!2 Colo. R. @ Lees Ferry SCGC0000 1800
SAMPLE 7 H-5712 Reag!2 Reagent Spike SCQC0001 1830

==========

LAKE POWELL
NUTRIENTS (mg/L)

Chemistry Lab. No.	TP-P	OP-P	NH3-N	NO3+NO2-N	TKN-N
H-5645	1/ND	ND	ND	0.561	ND
H-5646	0.022	0.020	ND	0.794	0.104
H-5647	ND	ND	ND	0.549	0.160
H-5648	ND	ND	ND	0.584	0.129
H-5649	ND	ND	ND	0.750	0.116
H-5650	0.020	0.021	ND	1.19	0.148
H-5706	ND	ND	ND	0.441	0.144
H-5707	0.007	ND	ND	0.493	0.101
H-5708	0.011	0.007	ND	0.537	0.129
H-5709	ND	ND	ND	0.428	0.117
H-5710	0.007	ND	ND	0.466	0.093
H-5711	0.012	0.007	ND	0.506	0.106
H-5712	0.008	0.007	ND	0.132	ND
Detection limit:	0.005	0.005	0.010	0.030	0.050

1/ND = Not detected at listed detection limit.